JVC

SERVICE MANUAL

COMPACT COMPONENT SYSTEM

CA-V805T

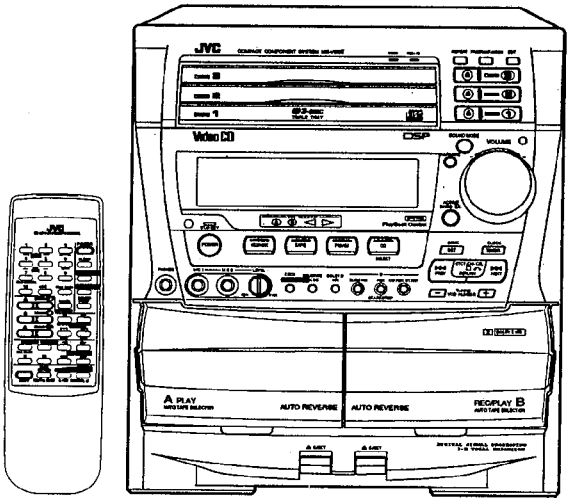

PICK UP	OPT-6S
Lsi	MN35510

Area Suffix

US .... Singapore
UT .... Taiwan
UB .... Hong Kong
U ..... Other Area

PlayBack Control Video CD

Contents

Safety Precautions 1-2
Inportant for Laser Products 1-3
Technical Explanation 1-4
Instruction Book 1-8
Description of Major LSIs 2-1
Internal Connection of FL Display Tube .. 2-15
Disassembly Procedures 2-17
Adjustment Procedures 2-32
Maintenance of Laser Pickup 2-37
Replacemant of Laser Pickup 2-37
Self-diagnosis for pickup 2-38
Block Diagram 2-41
Schematic Diagrams 2-42
Printed Circuit Boards 2-49
Parts List 3-1

No.20578
Mar. 1996

Safety Precautions

1. The design of this product contains special hardware and many circuits and components specially for safety purposes. For continued protection, no changes should be made to the original design unless authorized in writing by the manufacturer. Replacement parts must be identical to those used in the original circuits. Services should be performed by qualified personnel only.
2. Alterations of the design or circuitry of the product should not be made. Any design alterations of the product should not be made. Any design alterations or additions will void the manufacturer's warranty and will further relieve the manufacture of responsibility for personal injury or property damage resulting therefrom.
3. Many electrical and mechanical parts in the products have special safety-related characteristics. These characteristics are often not evident from visual inspection nor can the protection afforded by them necessarily be obtained by using replacement components rated for higher voltage, wattage, etc. Replacement parts which have these special safety characteristics are identified in the Parts List of Service Manual. Electrical components having such features are identified by shading on the schematics and by (⚠) on the Parts List in the Service Manual. The use of a substitute repalcement which does not have the same safety characteristics as the recommended replacement parts shown in the Parts List of Service Manual may create shock, fire, or other hazards.
4. The leads in the products are routed and dressed with ties, clamps, tubings, barriers and the like to be separated from live parts, high temperature parts, moving parts and/or sharp edges for the prevention of electric shock and fire hazard. When service is required, the original lead routing and dress should be observed, and it should be confirmed that they have been returned to normal, after re-assembling.
5. Leakage currnet check (Electrical shock hazard testing)
   After re-assembling the product, always perform an isolation check on the exposed metal parts of the product (antenna terminals, knobs, metal cabinet, screw heads, headphone jack, control shafts, etc.) to be sure the product is safe to operate without danger of electrical shock.
   Do not use a line isolation transformer during this check.
   - Plug the AC line cord directly into the AC outlet. Using a "Leakage Current Tester", measure the leakage current from each exposed metal parts of the cabinet, particularly any exposed metal part having a return path to the chassis, to a known good earth ground. Any leakage current must not exceed 0.5mA AC (r.m.s.).
   - Alternate check method
     Plug the AC line cord directly into the AC outlet. Use an AC voltmeter having, 1,000 ohms per volt or more sensitivity in the following manner. Connect a 1,500Ω 10 W resistor paralleled by a 0.15 µF AC-type capacitor between an exposed metal part and a known good earth ground.
     Measure the AC voltage across the resistor with the AC voltmeter.
     Move the resistor connection to each exposed metal part, particularly any exposed metal part having a return path to the chassis, and meausre the AC voltage across the resistor.
     Now, reverse the plug in the AC outlet and repeat each measurement. Any voltage measured must not exceed 0.75 V AC (r.m.s.). This corresponds to 0.5 mA AC (r.m.s.).

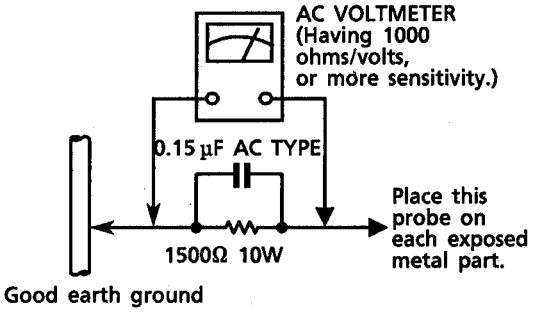

Warning

1. This equipment has been designed and manufactured to meet international safety standards.
2. It is the legal responsibility of the repairer to ensure that these safety standards are maintained.
3. Repairs must be made in accordance with the relevant safety standards.
4. It is essential that safety critical components are replaced by approved parts.
5. If mains voltage selector is provided, check setting for local voltage.

Important for Laser Products

1. CLASS 1 LASER PRODUCT
2. **DANGER :** Invisible laser radiation when open and interlock failed or defeated. Avoid direct exposure to beam.
3. **CAUTION :** There are no serviceable parts inside the Laser Unit. Do not disassemble the Laser Unit. Replace the complete Laser Unit if it malfunctions.
4. **CAUTION :** The compact disc player uses invisible laser radiation and is equipped with safety switches which prevent emission of radiation when the drawer is open and the safety interlocks have failed or are defeated. It is dangerous to defeat the safety switches.
5. **CAUTION :** If safety switches malfunction, the laser is able to function.
6. **CAUTION :** Use of controls, adjustments or performance of procedures other than those specified herein may result in hazardous radiation exposure.

VARNING : Osynlig laserstrålning när denna del är öppnad och spärren är urkopplad. Betrakta ej strålen.

VARO : Avattaessa ja suojalukitus ohitettaessa olet alttiina näkymättömälle lasersäteilylle. Älä katso säteeseen.

ADVARSEL : Usynlig laserstråling ved åbning, når sikkerhedsafbrydere er ude af funktion. Undgå udsættelse for stråling.

ADVARSEL : Usynlig laserstråling ved åpning, når sikkerhetsbryteren er avslott. unngå utsettelse for stråling.

REPRODUCTION AND POSITION OF LABELS

CLASS 1
LASER PRODUCT

CLASSIFICATION LABEL
(Except for the U. S. A. and Canada)

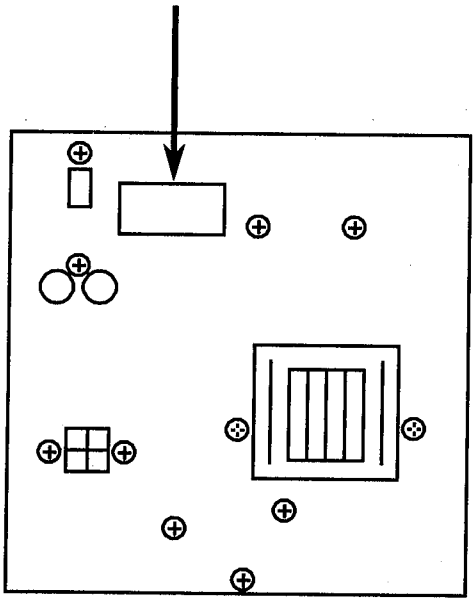

WARNING LABEL
(Except for the U. S. A.)

DANGER: invisible laser radiation when open and interlock failed or defeated. AVOID DIRECT EXPOSURE TO BEAM. (e)

VARNING: Osynling laserstråling när denna del å öppnad och spärren är urkoppled. Betrakta ej stålen. (s)

ADVARSEL: Usynling laserstråling ved åbning, når sikkerhedsafbrydere er ude at funktion. Undgåudsættelse for stråling. (d)

VARO: Avattaessa ja suojalukitus ohitettaessa olet alttiina näkymättömälle lasersäteilylle. Älä katso säteeseen. (f)

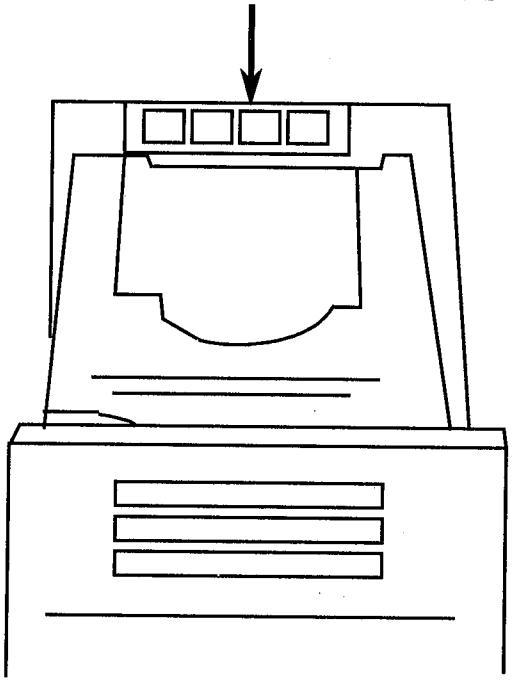

TECHNICAL EXPLANATION

1. What is video CD ?

Video CD makes it possible to playback digital moving picture and sound for maximumly 74 minutes on 12cm disc and it is expected to use them widely in future for Karaoke, cinema, music, education and so on.

Its Standard is based on the International Standard of MPEG1.
MPEG1 is abbreviation of Moving Picture Image Coding Experts Group which extensively standardizes the digital high efficiency (compression) and multiple method for audio and video data by experts in Electronics, Computer, Communications, Broadcast and so on.

This video CD was established on Mar. '93 by Philips and JVC and standardized based on "Karaoke CD" worldwide licensed.
The Karaoke CD has been already used for business in Japan.

2. Main features

① Adopting the technique of high efficiency coding for moving picture and sound data, this 12cm video CD can playback video screen in high quality and audio for 74minutes like CD-DA.

② Picture software can be converted to video CD by compression and editing.

③ CD-I player with the digital video expansion cartridge can reproduce the video disc.

④ Video CD can adopt every broadcasting measures in the world (NTSC, PAL and SECAM).

⑤ Video CDs are durable and easy to be handled and manufactured as same as previous CDs.

3. Outline of specification

[Basic] · Based on CD Bridge Standard.

· Physical format : Based on CD-ROM Format (Yellow Book)

· Video data : Based on MPEG1 (1/100 compression)

· Audio data : Based on MPEG1 Layer II
(approx. 1/6 compression, sampling frequency 44.1kHz)

[Option] · Still picture : Standard level and highly accurate level

· Playback control : Playback function with control recorded on CD.

4. High efficiency coding

(1) What is this technique ?

Previous 12cm disc can not record data for more than 40 seconds because of a large amount of data resulted from digitalizing pictures, though, audio sound had already been digitalized.

The high efficiency coding made it possible to record those data on a disc by compressing and restore them at playback.

The high efficiency coding made it possible to record those data on a disc by compressing and restore them at playback.

This newly developed technique is not only for audio visual but also for Communications such as TV telephone and the basic to realize multimedia by processing letters, audio sound and picture by computer. Its International Standard is the MPEG.

(2) Theory

One screen is divided into several blocks and the amount of picture data is calculated for each blocks to compress effectively.

- On one screen, the simpler the original picture, the larger the compression can be done. For example, a lot of blocks become entirely blue when the sky is pictured. And, this time the data is largely reduced.
- When the screen is moving, the difference between actual screen and the screen which change is predicted from the former one is picked up and transmitted. For example, only transmitting movement of an airplane can picture the flying plane over a mountain.

5. Difference between DV and video CD.

JVC has developed DV, that is, Standard for CD Moving Picture Karaoke and established and standardized with Philips on Mar. '93 to license Standard for CD Karaoke.

Four companies added Panasonic and Sony have established Standard for video CD and asked its adoption to hardware and software industries to cooperate its popularizing and promotion.

The video CD Standard is the one which the functions for playback control and still picture playback are added to CD Karaoke Standard.

The purpose of video CD is to apply the CD moving picture widely not only for Karaoke but also cinema, music, education and products introduction.

6. Resolution

[Basic]	· 30 frames / sec. Resolution : 352×240 dot	
[Still picture mode]	Highly accurate level :	Approx. 2,000times of (704×480)dot can be got.
	Standard level : 352×240 dot	

7. Playback control

Selecting the number displayed on the screen allows video playback in the order previously set by the video CD manufacturer.

Video is reproduced according to the address and its contents which are stored in PLAY, SELECTION and END inside PSD file recorded on the disc.

* PSD ····· Play Sequence Descriptor

The PSD file has maximumly 512K and can store 32K lists in maximum.
As same as PSD file, LOT file which describes each list's starting address inside PSD file is recorded in video CD information for track 1. (See Fig.-1.)

* LOT ····· List ID Offset Table

7-1 PLAY list

1. Basic operation

Plural sequences are reproduced in the order which is described on the list. Maximumly, 255 sequences can be described.

2. Applied operation

- Skip (NEXT, PREVIOUS, RETURN)
- Setting playback time
- Setting time to transmit sequence
- Automatic stop

7-2 Selection list

1. Basic operation

Corresponding address for PLAY list is described according to the selection number of still or moving picture's menu.

2. Applied operation

- Switching menu (NEXT, PREVIOUS, RETURN, DEFAULT)
- Setting initial value for selecting item number
- Processing time out
- Repeated playback of sequence

7-3 End list

List to finish application's execution.

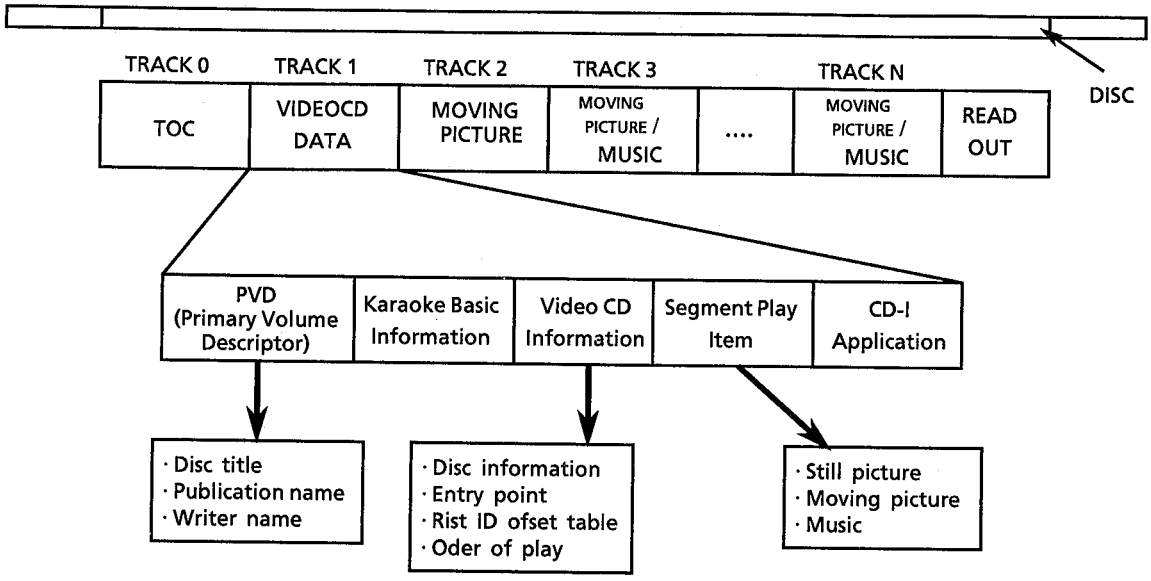

[Figure1] Structure of video CD

- Data for still and moving pictures which are used for playback control function are solely recorded on track1.

· For playback of storage media like video CD, trick mode is required such as fast forward, rewinding, intermediate playback, reversed playback since all data have been already prepared.

GOP(Group of Pictures) structure was developed for video CD to realize those trick modes.

1 picture is not enough for completed information for video CD since coded picture data is based on its before and after data. Random access is possible by using GOP as a unit which data are gathered altogether for a few pictures.

Sequence header is used for the random accees's heading.

That is, entry point in GOP units are prepared on some spots of MPEG bit stream. Generally, 1 GOP is pictures for approx. 0.5sec.(15pictures). It prevents malfunction such as stopped picture caused by pause of each initial tracks after dividing a track.

Entry points can be set after track2. Each track can set maximumly 99points and 500points can be set on one disc(100~599points). Entry points has similar role as CD index. Therefore, they are adopted for moving pictures in cinema.

Table of contents

GENERAL INFORMATION 1
Checking supplied accessories 1
Types of CDs you can play 1
Adjusting the voltage selector switch 1
Laying out the System 1
BEFORE USING FOR THE FIRST TIME 2
Connecting the antennas 2
Connecting the speakers 2
Connecting other equipment 3
Connecting the power cord 4
Putting the batteries into the remote control unit 5
Using the remote control unit 5
UNIQUE FEATURES 6
About the DEMO mode 6
About the ONE-TOUCH easy-on feature 6
How to use ONE-TOUCH buttons 6
Digital Signal Processor (DSP) 6
OVERVIEW OF CONTROLS 7
Front panel 7
Display 8
Remote control unit 9
COMMON OPERATIONS 10
Amplifier/Tuner 10
Turning the power ON and selecting sources 10
Adjusting the volume 10
Using stereo headphones 10
Reinforcing the bass sound 11
Fade/Muting 11
Selecting the sound modes 11
BASIC OPERATIONS 12
Now you can play a variety of CDs!! 12
Triple disc tray usage 12
Preparation for playing 12
Inserting/removing the disc(s) 12
Starting to play disc(s) 12
Using number keys 12
Using VCD INDEX 13
Stopping play 13
Pausing play 13
Auto search 13
Manual search 13
To use slow motion playback 13
To use frame-by-frame playback 13
VARIOUS UNIQUE FUNCTIONS 14
Programming track sequence 14
Programming track sequence (front panel) 14
Canceling a programmed track 14
Repeating tracks 14
Randomly playing tracks 15
OPERATION OF PLAYBACK CONTROL FUNCTION .. 16
Playing Video CDs with Playback Control function 16
Video CD with Playback Control function 17
GRAPHIC/DIGITAL AUDIO CDs 18
Playing CD Graphics/digital audio CDs 18
Playing CD Graphics 18
Playing digital audio CDs 18
AM-FM TUNER 19
Setting the AM tuner interval spacing 19
Tuning in a station 19
Presetting stations 20
Tuning in a preset station 20
CASSETTE DECK 21
Listening to tapes 21
Listening to tapes in deck A or B 21
Locating the beginning of a song — Music Scan 22
Fast forward/Reversing tapes 22
Continuous play 22
RECORDING 23
Recording tapes 23
Dubbing tapes 23
Recording on the connected equipment 24
CD edit recording 25
CD direct recording 25
Auto edit recording 26
KARAOKE 27
Singing along — Karaoke 27
Singing along with conventional audio CDs or tapes — Vocal Masking 27
Singing along with Multiplex Karaoke Video CDs without the PBC function or Multiplex Karaoke CD-Gs 28
Singing along with Multiplex Karaoke Video CDs with the PBC function 29
Adjusting music key 29
USING THE MICROPHONE 30
Microphone mixing 30
Recording only through the microphone 30
USING THE TIMER 31
Setting the clock 31
Using recording timer 31
Setting the daily timer 32
Setting the sleep timer 32
Timer priority 33
MAINTENANCE 34
Handling compact discs 34
Handling cassette tapes 34
Cassette decks 34
TROUBLESHOOTING 35
Troubleshooting 35
SPECIFICATIONS 36

GENERAL INFORMATION

Checking supplied accessories

After unpacking, check to be sure that you have all the following items:

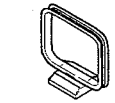

AM loop antenna and stand (1)

Remote control unit (1)

FM antenna (1)

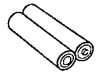

Batteries (2)

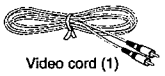

Video cord (1)

AC plug Adaptor (1)
(except for Singapore and HongKong)

If any items are missing, consult your dealer immediately.

Types of CDs you can play

Many types of compact discs are sold for a variety of uses. The Video CD Player can play the following compact discs:

- **Video CD**
  for audio and video (moving picture) reproduction, including multiplex sound.

COMPACT disc DIGITAL VIDEO

- **Video CD with Playback Control function**
  featuring menu-type operation and super-fine still pictures for audio and video (moving picture) reproduction, including multiplex sound.

PlayBack Control

- **CD Graphics (CD-G)**
  for audio and video (still picture) reproduction, including multiplex sound.

COMPACT disc DIGITAL AUDIO GRAPHICS

- **Digital Audio CD, including single discs**
  for audio reproduction.

COMPACT disc DIGITAL AUDIO

CDs you can't play back
Do not play back CD-ROMs on this equipment. Doing so may generate a noise which can damage your speakers.

Adjusting the voltage selector switch

Before plugging in the unit, set the correct voltage for your area with the voltage selector switch on the rear of the System.

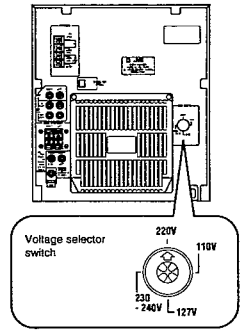

Use a screwdriver to rotate the voltage selector switch so the voltage number the arrow is pointing at is the same as the voltage where you are plugging in the System.

CAUTION
To avoid damaging CA-V805T set the voltage selector switch before plugging in the System.

Laying out the System

Leave a space of at least 1 cm on both sides of the System and at least 10 cm at the back, for ventilation.

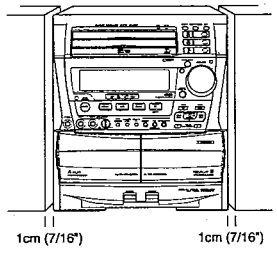

BEFORE USING FOR THE FIRST TIME

Connecting the antennas

FM antenna

Antenna preparations

You need to connect the FM antenna to the back of the System.

- Open the FM antenna wire connectors by pushing them to the side, insert the FM antenna wires, and close them by pushing them back into their original position.
- Hang the FM antenna on the wall behind the System.

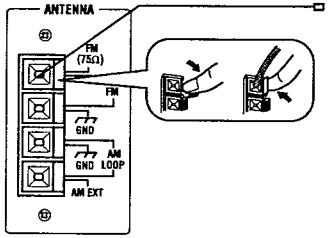

AM antenna

1. **Connect the AM loop antenna to the AM LOOP terminals as illustrated.**
2. **Turn the AM loop antenna until you have the best reception.**

To connect an outside AM antenna

When reception is poor, connect a single vinyl-covered wire to the AM EXT terminal. (The AM loop antenna must remain connected.)

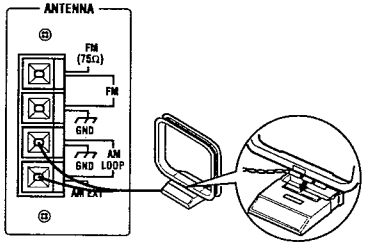

Note

For better reception of both FM and AM

Make sure the antenna conductors do not touch any other terminals or connecting cords.

Keep the antennas away from metallic parts of the System, connecting cords, and the AC power cord.

Connecting the speakers (Sold separately)

2 types of speaker cords are included with the speaker system.

Speaker cord (2)

Speaker cord (2) (One side pin plug type)

Main speaker and sub speaker connections

(Both main and sub-speakers should be connected)

1. **Remove the insulation at the end of each cord and twist the core of the cord.**

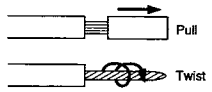

2. **Open the speaker terminal.**
3. **Insert the end of the speaker cord to the terminal.**
   For each speaker, connect one end of the speaker cord to the speaker terminals on the rear of the System and one end to the speaker. Match the polarity of the speaker terminals: Red (+) to red (+) and black (–) to black (–).
4. **Close the speaker terminal on the rear of the System or just re-lease your finger from the terminal on the speaker.**

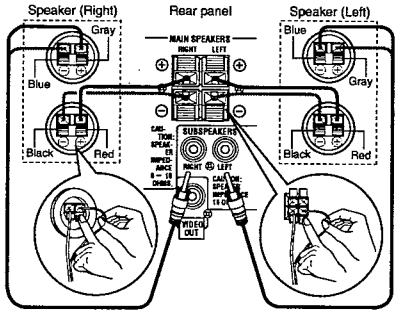

5. **When connecting the sub speakers, insert the wires into the sub-speaker terminals of the speaker and the pin point plugs into the pin point connectors of the System.**

English

Connecting other equipment

You can connect the following equipment to this System:

- TV with a video input jack — used as a monitor of VCR playback or video CD playback.
- VCR — used as a sound playback and sound recording device.
- Audio/video equipment such as a digital video disc player — used only as a playback device.
- Audio equipment with an optical digital input terminal — used only as a digital recording device like MD/DCC player.

Caution

- DO NOT connect other equipment while power is on.
- DO NOT plug in the AC power cord/until all connections are complete.

To connect a TV

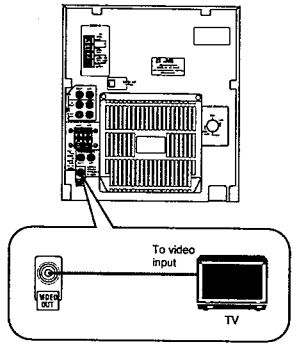

Connect the video input jack on the TV and the VIDEO OUT jack, using the supplied video cord.

To view a video CD, you need to connect an NTSC-compatible TV.

To connect audio/video equipment such as a digital video disc player

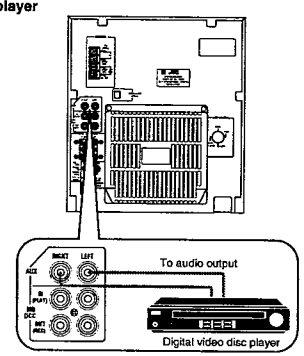

Connect the audio output jacks on the other equipment and the AUX jacks, using an audio cord (not supplied).

To connect a VCR

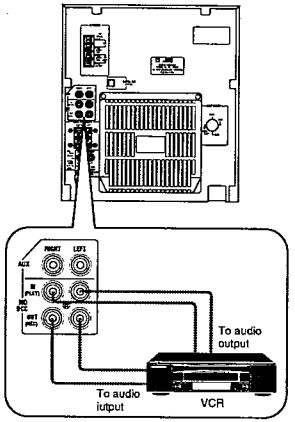

By using audio cords (not supplied), connect:

- Between the audio input jacks on the VCR and the MD/DCC OUT (REC) jacks,
- Between the audio output jacks on the VCR and the MD/DCC IN (PLAY) jacks.

(No. 20578) 1-9

CA-V805T

To connect MD, DCC and DAT

You can connect digital optical equipment with or without using the digital optical terminal.

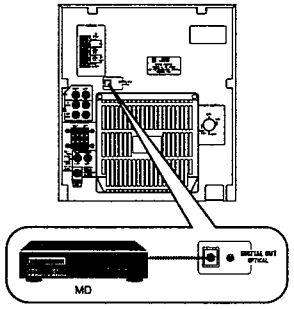

Before connecting the other equipment, remove the protective plug from the terminal. Connect the digital optical terminal on the other equipment (MD,DCC, DAT) and the DIGITAL OUT OPTICAL terminal on the System, using a digital optical cord (not supplied).

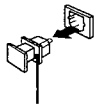

If the digital equipment has no digital optical terminal, connect the audio output terminals to the MD DCC IN (PLAY) jacks, and the audio input terminals to MD DCC OUT (REC) jacks. Make sure to connect the wires correctly: Red to red and white to white.

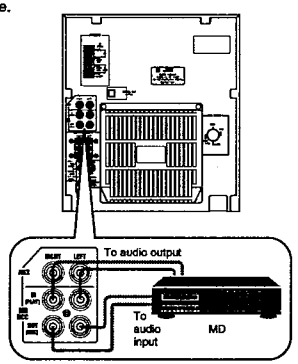

Notes

When recording onto the MD through this terminal

- You can record only audio signals of conventional CDs and CD-Gs through this terminal.
- It is not recommended to use the automatic marking function of the MD player since the marking signal cannot be recorded correctly between recorded tracks. It is preferable to use manual marking while recording.

Connecting the power cord

NOW, you can plug the power cord.

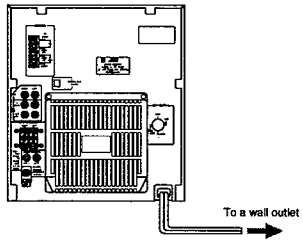

If the wall outlet does not match the AC plug, use the supplied AC plug adaptor.

When the power cord is connected, the STANDBY light on the left-hand side of the System's front panel comes on. [See "Overview of controls" for a description of the controls on the System.]

Putting the batteries into the remote control unit

The battery compartment is located on the back of the remote control.

1. **Press down on the triangular mark of the compartment cover, and slide the cover off to open the compartment.**

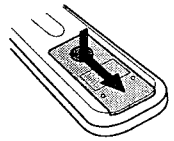

2. **Place the two accessory R6P (SUM-3)AA (15F) batteries in the remote control according to the polarity markings ("+" and "–") inside the compartment and on the batteries.**

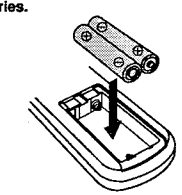

3. **Place the cover over the compartment, press down lightly, and push it upward until it snaps on.**

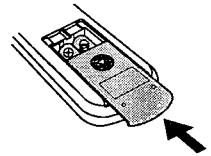

The batteries last about one year with normal use. If function of the remote control become erratic, replace the batteries. See "Precautions for the safe use of batteries" below for more information.

Precautions for the safe use of batteries

Observe the following precautions for the safe use of batteries. Their life will be shortened, they may burst or their contents may leak if they are used improperly:

- Remove batteries from the remote control if it is not going to be used for a long period of time.
- Remove dead batteries and dispose of them properly.
- Never leave dead batteries lying around, take them apart, mix them with other refuse, or throw them into an incinerator.
- Never touch liquid that has leaked out of a battery.
- Do not mix new and old batteries, or batteries of different types, when replacing them.

Using the remote control

The remote control is ready to use when its batteries are installed properly.

To use it, point its infrared light-emitting window toward the display window of the System and press a button. The operating range of the remote control is up to about seven meters in front of the System and within about 30 degrees to each side — with nothing between the remote control and the System interrupting the beam path.

If pressing a button on the remote control does not produce any response, check to make sure it is pointed correctly and try again. If it still does not function, check the batteries.

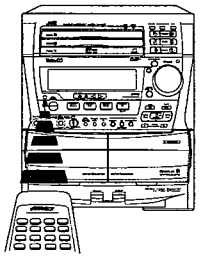

UNIQUE FEATURES

About the DEMO mode

The Compact Component system CA-V805T is equipped with a DEMO mode which is designed to introduce different features of the system to you. This DEMO mode will display these different features to you on the display screen. This feature will be turned on automatically when you plug in your system.
To turn the DEMO mode off push the DEMO button once while the System is off. The words "DEMO OFF" will appear in the display. (The System must be turned off to turn the demo feature off.)

About the ONE-TOUCH easy-on feature

This feature lets you start your system with ONE-TOUCH ease. When you approach the system the one touch easy-on buttons will start to blink and display the functions that are available to you. All you need to do is push any of the blinking buttons and the System will automatically turn on and start to play the chosen feature. When you push a blinking CD tray button that has no CD in it the tray will open.
To turn off the blinking buttons, and retain the easy-one feature, turn the System off and while holding down the STOP/CANCEL button, press the POWER button. The word "GUIDE OFF" will appear on the screen.

How to use ONE-TOUCH buttons

Changing the source
When you turn the power on, the indicator lights on the source buttons will turn to green and when you choose a certain source, that button will turn to red.

The disc buttons
- When the power cord is connected, only the disc tray buttons with CDs loaded in them will light. The light will change from green to red when they start to play.
- After you plug in the power cord after it has been disconnected, or power has been restored after a power outage, the ONE-TOUCH buttons will not illuminate.

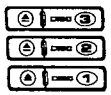

Digital Signal Processor (DSP)

The DSP built into this System is a processor which performs sophisticated digital signal processing to produce live sound space, based on sound field measurement data.
The sound field measurement data was obtained by measuring the sound fields of world famous concert halls using a "symmetrical 6-point sound analysis method", a unique three dimensional sound field measuring method created by JVC.

OVERVIEW OF CONTROLS

See pages in the parentheses for details.

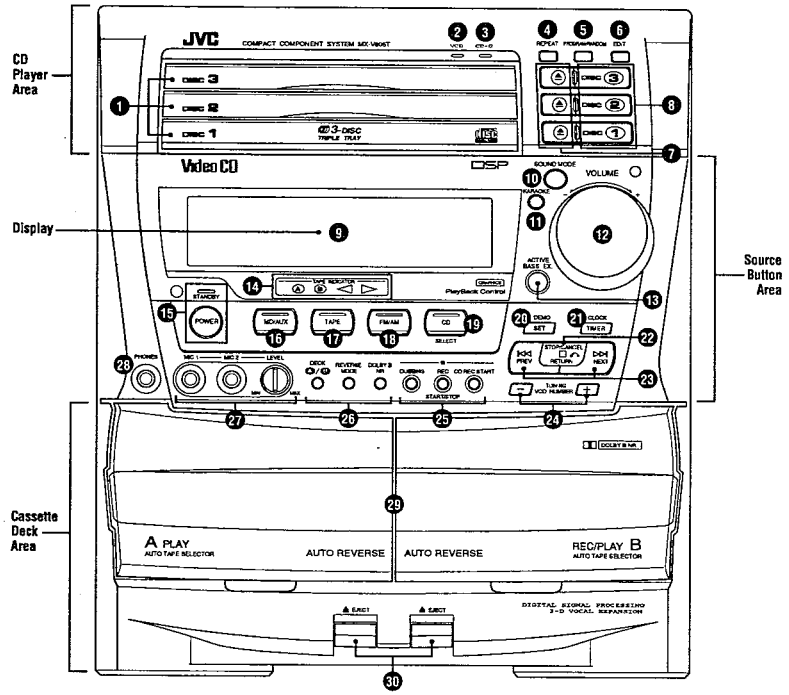

Front Panel

CD player area

	Main Ref. Page
❶ Disc trays	P.12
❷ VCD indicator	P.12
❸ CD-G indicator	P.18
❹ REPEAT button	P.14
❺ PROGRAM/RANDOM button	P.14, 15
❻ EDIT button	P.26
❼ ▲ (open/close) buttons	P.12
❽ Disc buttons	P.12

Display

❾ Display (See page 8 for description)

Source button area

❿ SOUND MODE button	P.11
⓫ KARAOKE button	P.27
⓬ VOLUME knob	P.10
⓭ ACTIVE BASS EX. (Extension) button	P.11
⓮ TAPE INDICATOR	P.21
⓯ STANDBY indicator/POWER button	P.10
⓰ MD/AUX selector button	P.10
⓱ TAPE selector button	P.21
⓲ FM/AM selector button	P.19
⓳ CD selector button/SELECT button	P.12
⓴ DEMO mode/SET button	P.6, 20
㉑ TIMER/CLOCK button	P.31
㉒ ■/↶ STOP/CANCEL/RETURN button	P.13, 16
㉓ ⏮/⏭ PREV/NEXT buttons	P.13, 16, 22
㉔ TUNING/VCD NUMBER buttons	P.13, 19
㉕ Record control buttons	P.23
㉖ Tape control buttons	P.21
㉗ MIC jack/MIC LEVEL knob	P.30
㉘ PHONE jack	P.10

Cassette deck area

㉙ Tape deck A/B	P.21
㉚ ▲ EJECT buttons	P.21

(No. 20578) 1-11

CA-V805T

Display

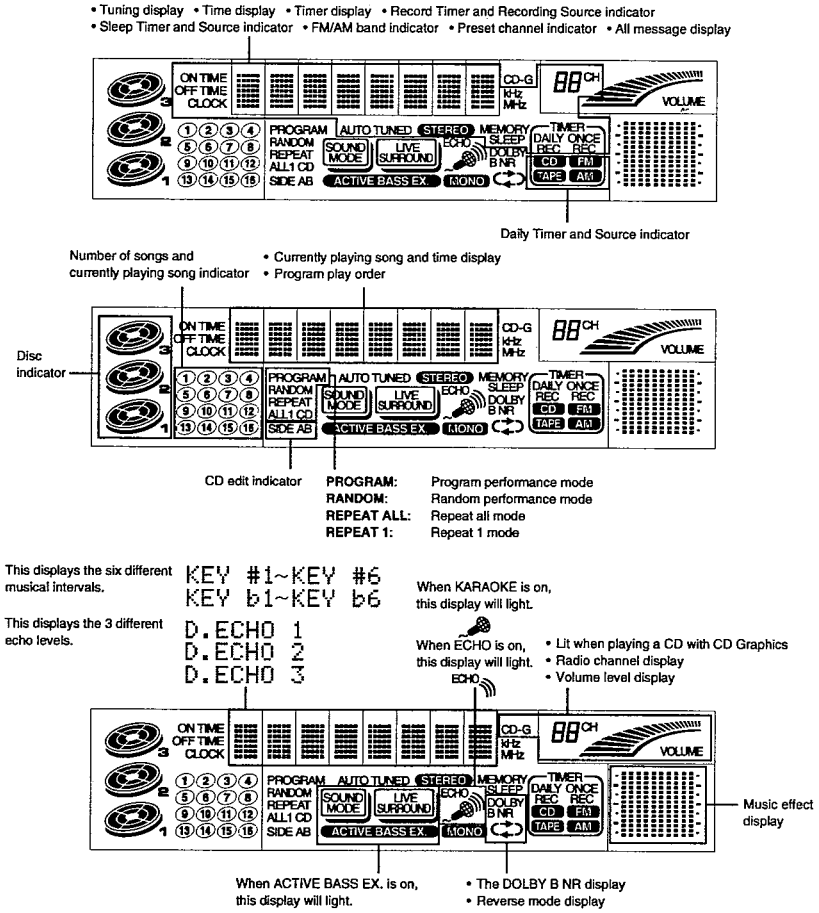

Remote Control Unit

Function and number buttons

❶ POWER button
❷ SLEEP button
❸ FM/AM button
❹ MD/AUX button
❺ SOUND MODE button
❻ 1, 2 buttons — ◀◀/▶▶ MANUAL SEARCH (S)
❼ 3 button — ▮▮ STILL (S)
❽ 4, 5 buttons — ⌒/⌒ VCD INDEX (S)
❾ 6 button — SLOW (S)
❿ 7 button — CD-G CHANNEL (S)
⓫ 8, 9, 10 button
⓬ +10 button (enables 11 thru 99 number selection)
⓭ PLAY MODE button
⓮ CANCEL button — AUTO/MONO (S)

CD buttons

⓯ ▲ Open/close buttons
⓰ Disc buttons
⓱ ■ RETURN/STOP button
⓲ ▶ SELECT/PLAY button
⓳ ⏮/⏭ PREV/NEXT buttons

Cassette deck buttons

⓴ A/B Deck select buttons
㉑ ◀/▶ PLAY buttons
㉒ ● REC/PAUSE button
㉓ ■ STOP button
㉔ ◀◀/▶▶ Fast forward/Reverse buttons

System Control buttons

㉕ SHIFT button (enables buttons to have various different functions)
㉖ FADE MUTING button — DIGITAL ECHO (S)
㉗ VOLUME buttons — KEY CONTROL button (S)

(S): The buttons with the (S) mark after them have different functions when used in unison with the SHIFT button.

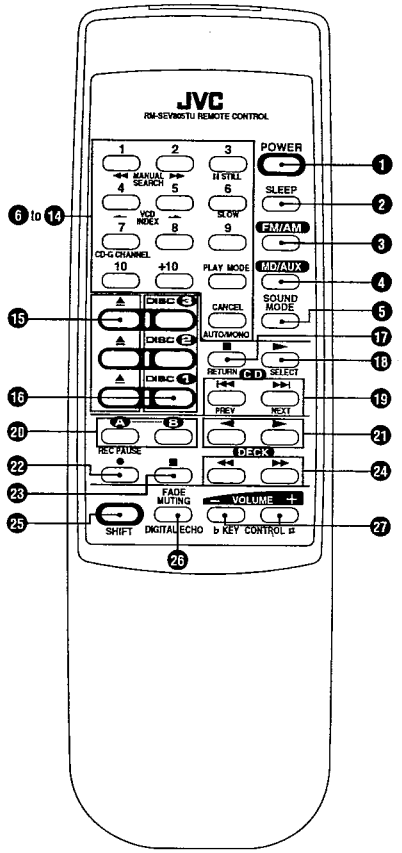

COMMON OPERATIONS

Amplifier/Tuner

Turning the power ON and selecting sources

When you press the play button for a particular source, the System automatically turns on and starts playing the source.

To select the auxiliary equipment as the source, press (MD/AUX) so that the System automatically turns on (when you press MD/AUX the System will turn on, but the AUX equipment will not start to play).

When using the remote control, press MD/AUX. Each time you press the button, the source alternates between MD and AUX.

To turn on the System without playing, press POWER button so that the STANDBY indicator turns off.

To turn off the System, press POWER button again so that the STANDBY indicator lights red.
Some energy (20 watts) is always consumed even while the System is in standby mode.
To switch off the power supply completely, unplug the AC power cord from the AC outlet.

Note
When you unplug the AC power cord or power failure occurs
The clock is reset to 0:00 right away, while the tuner preset stations will be erased in a few days.

Adjusting the volume

Turn the VOLUME knob clockwise to increase the volume or counterclockwise to decrease it.

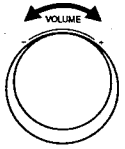

When using the remote control, press VOLUME + to increase the volume or press VOLUME – to decrease it.

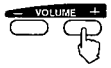

Using stereo headphones

Connecting stereo headphones
Connect stereo headphones to the PHONES jack at the middle-left of the front panel.

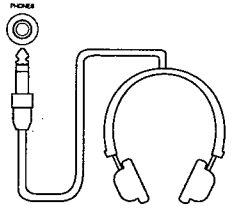

Note
For private listening
Connect a pair of headphones to the PHONES jack. No sound comes out of the speakers. Be sure to turn down the volume before connecting or putting headphones on.

Caution
DO NOT turn on the unit and/or start playing any source without setting VOLUME to MIN; otherwise, the sudden blast of sound can damage your hearing, speakers and/or headphones.

English

Reinforcing the bass sound

When using the ACTIVE BASS EX., the richness and fullness of the bass sound is maintained regardless of how low you set the volume.
You can use this effect only for playback.

To get the effect, press the ACTIVE BASS EX. (Active Bass Extension) button so that the ACTIVE BASS EX. indicator lights up in the display.

To cancel the effect, press the button again so that the indicator goes off.

Fade/Muting

When you press the FADE MUTING button (on the remote control) the volume will automatically fade out. If you press the button again it will return to its previous level.

Selecting the sound modes

You can use only one mode at a time. Sound modes can be used for playback and for recording.

To select the sound modes, push the SOUND MODE button until the sound mode you want appears in the display.

The SOUND MODE indicator lights up. (When selecting one of the Live Surround modes, the LIVE SURROUND indicator also lights up.)

Sound modes

* **D.CLUB:**	Increases resonance and bass.
* **HALL:**	Enhances the mid-frequency range which human voice is mostly made up of, like in a concert hall.
* **STADIUM:**	Adds clarity and spreads the sound, like in an outdoor stadium.
KARAOKE:	Puts your voice in instead of the vocals.
ROCK:	Gives a feeling of a live atmosphere. Good for rock music.
POP:	Enhances the vocals of the music.
CLASSIC:	Adds depth and brilliance to the sound.
* **3D VOCAL:**	Adds depth and dimension to the music.

* indicates a sound mode that incorporates live surround sound.

To cancel the effect, press the sound mode until the word "OFF" appears on the display.

When using the remote control
Press SOUND MODE button repeatedly until the sound mode you want appears in the display.
Each time you press the button, the modes change as follows:

→ D.CLUB → HALL → STADIUM → KARAOKE →
OFF ← 3D VOCAL ← CLASSIC ← POP ← ROCK ←

(No. 20578) 1-13

CA-V805T

BASIC OPERATIONS

Now you can play a variety of CDs!!

Triple disc tray usage

Up to three (3) discs can be loaded in the System. You may insert a disc into any of the disc trays 1 through 3 whichever you prefer.
If you want to play only a specified disc, press the corresponding disc 1, 2 or, 3 button located to the right of the ▲ (OPEN/CLOSE) button.

When three discs are inserted, basic order of playing is as following.

- Pressing DISC 1: DISC 1 → DISC 2 → DISC 3 → STOP
- Pressing DISC 2: DISC 2 → DISC 3 → DISC 1 → STOP
- Pressing DISC 3: DISC 3 → DISC 1 → DISC 2 → STOP

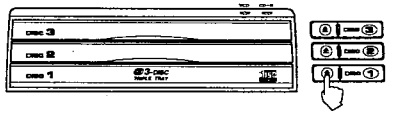

Preparation for playing

The CA-V805T is equipped with an ONE TOUCH easy-on feature that lets you turn the System on with one easy touch. Just press the button of the source you want to play and it will start to play.

Inserting/removing the disc(s)

Press the ▲ (OPEN/CLOSE) button (1 through 3) to open the disc tray. Then place the disc in the round recess of the tray with the label side up. To close the tray, press the ▲ (OPEN/CLOSE) button again.

If you press the ▲ (OPEN/CLOSE) button of the playing disc, the player stops and then opens the tray.
If you press the ▲ (OPEN/CLOSE) button of a disc that is not being played, you can change discs without stopping play.

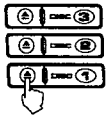

Note

- When loading a disc in the disc tray, be sure to position the disc inside the recess. Otherwise, the disc will be damaged when the disc tray is closed, and the disc cannot be removed from the System.

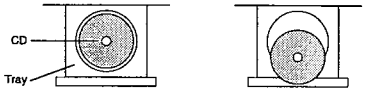

Starting to play disc(s)

Press the CD SELECT (PLAY) button. The player starts to play from the disc indicated in the display window. Press one of the DISC 1 through 3 buttons and the player plays the disc you pressed, from the 1st track. For individual track selection, use the number keys (1 to 10 and +10 button) on the remote control.

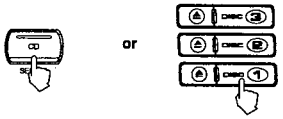

When you start play, the display window shows disc number and the track number being played.
If the disc is a Video CD, the VCD indicator on the front panel will light up.

Using number keys

Press the number keys to select numbers.

On the remote control ..... 1 to 10 and +10 key
Example: For number 5, press 5. For number 15, press +10, then 5. For number 20, press +10, then 10. For track 32, press +10 three times, then 2.

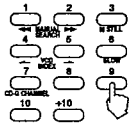

Using VCD INDEX

An index is a pre-recorded mark to locate a particular point in a disc. If a disc has indexes recorded, it is mentioned on the printed surface of the disc or on the disc's package.
This function is handled by the remote control. Hold down the SHIFT button and select the index number by pressing the VCD INDEX button.

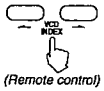

(Remote control)

Stopping play

To stop a disc, push the ■ STOP/CANCEL button once.

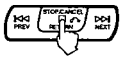

Pausing play

Press the CD button to temporarily suspend play.

To restart play press the CD button once again. On the remote control, while pressing the SHIFT key press the ▮▮ STILL button.
To restart play, press the ► SELECT play button on the remote control.

Auto search

On the System, during play, pressing the ⏮ PREV button once causes the player to replay the current track from the beginning. Pressing the ⏮ PREV button twice causes the player to play the previous track. Pressing the ⏭ NEXT button once causes the player to skip to the next track.

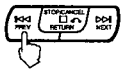

On the remote control, pressing the ⏮/⏭ PREV/NEXT buttons cause the disc to skip to the next or previous track.

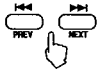

(Remote control)

Manual search

This function is handled by the remote control. To reverse/fast forward, hold down the SHIFT button and press either ◄◄ or ►► of the MANUAL SEARCH (No. 1, 2) buttons.
Continuing to hold down the buttons causes it to search much faster.

To use slow motion playback

During playbackof a video the CD, hold down the SHIFT button, and then press the SLOW button.
Each time you press the button, the slow motion speed decreases 1 level until the slowest speed is reached. During slow motion playback, no sound comes out.
To resume normal playback, press ► on the remote control.

To use frame-by-frame playback

During playback of a video CD, hold down the SHIFT button and then press the STILL ▮▮ button.
Play pauses and you see a still picture on the TV screen. Then each time you press the button, still pictures advance by one frame. During frame-by-frame playback, no sound comes out.
To resume normal playback, press ► on the remote control.

Notes

- If you do not advance the still picture for about 5 minutes, the CD player automatically stops, the still picture disappears and the blue screen appears on the TV screen.
- If you cannot restore normal playback after using the slow motion or frame-by-frame playback.
  - Press the ⏮ PREV button and then restart play.
  - Press the ■ RETURN button to go back to the menu and then restart play.

Programming track sequence

Preparation
It is not possible to enter programming mode during play. Verify whether the Player is playing. If playing, stop the player.

Operation

1. **Press the PLAY MODE button until PROGRAM is displayed.**

(Remote control)

2. **Specify the disc by the DISC (1 through 3) button and then the track by the number keys successively. You can program up to thirty two (32) tracks by repeating this procedure.**
3. **To play the programmed track press the ► SELECT button on the remote control.**

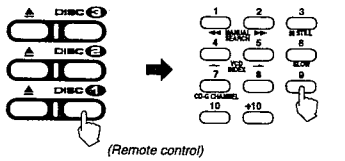

(Remote control)

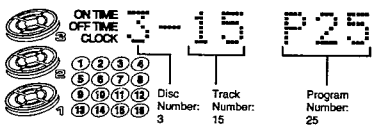

Programming track sequence (front panel)

Operation

1. **Press the PROGRAM/RANDOM button until PROGRAM appears in the display window.**
2. **Press the disc button to designate the disc you want to program.**
3. **Press the ⏮/⏭ PREV/NEXT button to designate the track number you want to program.**
4. **Press the SET button to enter your selection into programming.**
5. **Continue with this procedure until all desired programming is completed, and press the CD SELECT button.**

Canceling a programmed track

Operation
The Player must be stopped to cancel a track. Once you have stopped the Player. Press the STOP/CANCEL button and the last programmed track is canceled. The next track to be played and the number of programmed tracks left are displayed on the display screen.

Repeating tracks

It is possible to repeat all discs, repeat (1) CD or repeat 1 song.

Preparation
This function is controlled by the REPEAT button on the front panel of the Player.

Operation
By pressing the REPEAT button, REPEAT modes are cycled as shown below.

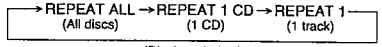

(Display window)

Notes

- When playing a programmed sequence of tracks, REPEAT ALL, and REPEAT 1 are available.
- When playing a disc with the Playback Control function, the repeat function is not available.

English

Randomly playing tracks

Preparations

- This function is controlled on the front panel and on the remote control.
- This function plays tracks randomly from all trays in which CDs are loaded.

Operation

1. **Stop the player.**
2. **Press the PLAY MODE or PROGRAM/RANDOM button until "RANDOM" appears in the display window.**

3. **Press ► PLAY button.**
4. **To cancel random playing, after stopping the player [■ STOP/CANCEL button], press the PLAY MODE button on the remote control or PROGRAM/RANDOM button on the front panel.**

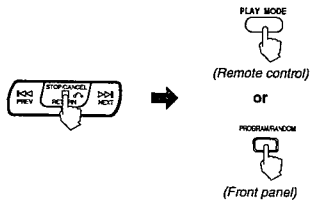

Notes

- Random is not available in program mode.
- In RANDOM mode, only REPEAT ALL and REPEAT 1 functions are available.

(No. 20578) 1-15

CA-V805T

OPERATION OF PLAYBACK CONTROL FUNCTION

Playing Video CDs with Playback Control function

This System provides a Playback Control function which utilizes a procedure (menu selection) programmed in a video CD. The playback operation procedure may differ depending on the disc you use.

The Playback Control function is described below and in the figure.

- High-resolution still image display - Super-fine reproduction of still images with more than 4 times the resolution of video tape.
- Menu-driven playback - interactive menus for easy selection of tracks

Preparations

- A video CD with the Playback Control function is required for this operation.
- The buttons available for use are on the remote control, are the ⏮/⏭ PREV/NEXT buttons, CD SELECT button, DISC (1 through 3) buttons, ↩ RETURN button and the number keys.

Button functions

⏮/⏭ PREV/NEXT buttons .. Move through menu.

CD SELECT button ..... Starts up a video CD with the PBC function in DISC tray 1 to 3.

DISC (1 through 3) buttons ..... Start up a video CD with the PBC function in the specified DISC tray.

↩ RETURN button ..... Returns to the menu.

Number keys and +10 button ... Select a specific menu item from the television screen or monitor.

◀◀/▶▶ MANUAL SEARCH ..... To use manual search while playing a video CD, hold down the SHIFT button, and press the ◀◀/▶▶ MANUAL SEARCH button on the remote control.

Note

Sometimes due to improper manufacturing video CDs will function differently.

Operation

1. **Press the DISC (1 through 3) or CD SELECT button, and then the Player starts up the PBC function. "PBC" is shown in the Display window.**

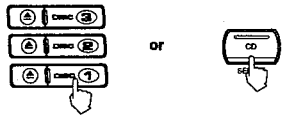

2. **To move through the menus, press the ⏮/⏭ PREV/NEXT buttons.**

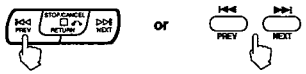

3. **When the menu you want appears, select an item in the menu by using the number keys. The numbers on the number keys correspond to the menu item numbers.**

On the front panel
Press the VCD NUMBER button −/+ and then CD SELECT button.
On the remote control
Press the number key and your selection will start to play.

4. **To return to a menu and stop the track being played, press the ↩ RETURN button.**

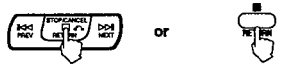

Notes

- Page numbers in the menu show that preceding pages exist. To move from the current menu, press the ⏮/⏭ PREV/NEXT buttons.
- When you press number keys, the track will start playing without pressing the ▶ SELECT button.
- When there is only one menu, pressing the NEXT button will cause the System to start playing.

Video CD with Playback Control function

What is the Playback Control function?
The Playback Control function, ushering in a new video CD age, allows you to enjoy menu-driven operation and high-resolution still images having a resolution four times greater than video pictures.

- **Menu-driven playback**
  You can interact with the screen using a menu display to select and play an entry.
- **High-resolution still image display**
  You can display high-quality images four times clearer than video pictures.

Example of playback by the Playback Control function

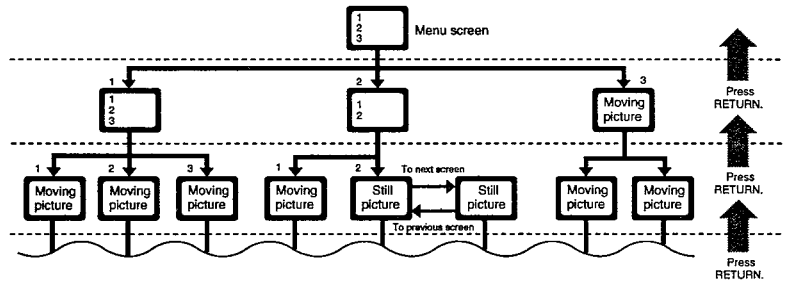

A selection menu is displayed when you start playing a video CD disc with the Playback Control function. The selection menu shows a list of numbers for selection. Some discs may show moving pictures or a divided screen.

1. When a list of numbers is displayed, selecting a number shows its contents.

2. When a moving picture is displayed, pressing SELECT at the time when a part of the movie you desire is shown plays the movie.

3. When the selection menu is redisplayed after you have played your selection, selecting a number again can replay its contents. (Some discs may show the menu screen several times.)

When "Next" and "Prev" are shown, pressing "NEXT" or "PREV" can change the selection menu.

4. After playback, press RETURN to go back to the previous screen.
   After playback, pressing RETURN for 2 seconds or more causes it to go back to the previous menu selection. Some discs may return you to the menu screen shown before playback.

Notes

- When a menu is displayed for a long time, about 10 minutes, the screen background automatically fades out to prevent screen burn-in while the setting is suspended.
- When using the REPEAT function the PBC function is not available.

GRAPHIC/DIGITAL AUDIO CDs

Playing CD Graphics/ digital audio CDs

Playing CD Graphics

Basic video CD-playing procedures apply although the pictures are still. A graphic picture CD is identified by "GRAPHICS" shown on the display and the CD-G indicator will lit on the front panel.

To select the CD graphic channel
If the CD-G has patterns (up to 15) of graphics (they are called "graphic channels"), you can select the one you want. You can find out whether or not the CD-G has graphic channels by looking at its package or the printed surface of the disc.

To change the graphic channel, press CD-G CHANNEL repeatedly until the graphic channel you want appears on the TV screen.

Notes

- The following operations may distort the image on the screen.
  - Searching for starting point of music
  - Fast forwarding/reversing
  - Stop/pause
- If paused, the screen changes to blue in a few minutes. This is to prevent burn-in of the TV screen.
- When you use as Karaoke, see page 28.

Playing digital audio CDs

Basic video CD-playing procedures apply to the reproduction of sound.

To record a CD onto a cassette tape, see page 23.

AM-FM TUNER

Before listening to FM and AM broadcasts, check the following:

- Both the FM and AM antennas are firmly connected.
- Check the AM tuner interval spacing (9 kHz or 10 kHz) for your area.

Setting the AM tuner interval spacing

Some countries space AM stations 9 kHz apart, and some countries use 10 kHz spacing.
When shipped, the built-in AM tuner is set to 9 kHz spacing.

To set the AM tuner to the 10 kHz spacing, be sure that the unit is turned off, but is plugged into a wall outlet. Hold down ▶▶I NEXT and then press POWER.
To set it back to the 9 kHz spacing, be sure that the unit is turned off, but is plugged into a wall outlet.
Hold down I◀◀ PREV and then press POWER.

Tuning in a station

Operation

1. **Press FM/AM.**

The unit automatically turns on and tunes in the most recent station (either FM or AM).
Each time you press the button, the band alternates between FM and AM.

2. **Press and hold TUNING – or +.**

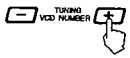

The unit starts searching stations and stops when a station of sufficient signal strength is tuned in.
The TUNED indicator lights up in the display. If a FM program is broadcast in stereo, the STEREO indicator also lights up.
To stop during searching, press TUNING – or +.

When using the remote control unit
Pressing FM/AM button, FM or AM automatically turns on the remote control and starts tuning in the most recent FM or AM station respectively.

Note
When you press TUNING – or + briefly and repeatedly, the frequency changes step by step.

To change the FM reception mode
When an FM stereo broadcast is hard to receive or noisy, press AUTO/MONO on the remote control, so that the AUTO indicator goes off in the display. Reception improves, but there are no stereo effects. In this monaural mode, static is produced (since muting is also canceled).

To restore the stereo effect, press AUTO/MONO so that the AUTO indicator lights up. In this stereo mode, static is not produced, and you can hear stereo sounds when a program is broadcast in stereo.

(No. 20578) 1-17

CA-V805T

Presetting stations

You can preset 10 stations each for FM and AM.

Operation

1. **Press FM/AM button and then TUNING – or + to tune in the station you want to preset.**
   See "Tuning in a Station" on the previous page.
2. **Press SET.**
   The MEMORY indicator blinks for about 5 seconds.
3. **Press ⏮/⏭ PREV/NEXT to select a channel number while the MEMORY indicator is blinking in the display.**
4. **Press SET again .**
   The MEMORY indicator goes off in the display.

To erase the preset stations
Storing a new station on a used number erases the previously stored one.

Note
When you unplug the AC power cord or power failure occurs, the preset stations will be erased in a few days. If this happens, preset the stations again.

Tuning in a preset station

Operation

1. **Press FM/AM.**
   The unit automatically turns on and tunes in the most recent station (either FM or AM).
   Each time you press the button, the band alternates between FM and AM.
2. **Press and hold ⏮/⏭ PREV/NEXT until the channel number you want appears in the display.**

When using the remote control
You can select a preset station directly by specifying its channel number.

Operation

1. **Press FM/AM.**
   The System automatically turns on, and then by pressing the FM/AM button, the System will switch from the most recently selected FM or AM station.
2. **Press the number button (1 — 10) to select your preset channels.**

Note
If you want to use the number buttons on the remote control to select the preset radio stations, you must select FM or AM from the remote control's FM/AM button.

CASSETTE DECK

Listening to tapes

You can play back type I, type II, and type IV tapes without changing any settings.

Type I ..... Normal
Type II ..... High Position
Type IV ..... Metal (For listening only, not recordable)

However, before you start play, you need to check the type of the Dolby NR* system used for the tape you play. Only the Dolby B NR is incorporated into this unit.

Listening to tapes in deck A or B

By pressing the TAPE button, you can turn on the unit, and start playing a tape if a tape is in the deck.

Operation

1. **Press EJECT for the deck you want to use.**
2. **Put the cassette in, with the exposed part of the tape down.**
3. **Close the cassette holder gently.**
4. **Press TAPE and the Player will start the side the tape indicator shows.**

To play the opposite side of the tape, press the TAPE button again. When the tape plays to the end, the deck automatically stops if the Reverse Mode is not on. (See "To play both sides repeatedly — Reverse Mode.")

On the Player to stop during play, press ■ STOP/CANCEL.
To reverse or forward, press ⏮/⏭ PREV/NEXT and the TAPE button to start the tape playing again.
To remove the cassette, press EJECT.

Note
When cassette tapes are loaded into both deck A and B, you can choose the deck to play by pressing the DECK Ⓐ/Ⓑ button on the front panel, or the Ⓐ or Ⓑ buttons on the remote control. Tape indicator shows you which deck will be activated.

* Dolby noise reduction manufactured under license from Dolby Laboratories Licensing Corporation.
"DOLBY" and the double-D symbol are trademarks of Dolby Laboratories Licensing Corporation.

To play a tape recorded with the Dolby NR system
Press DOLBY B NR to activate the Dolby B NR system.

The DOLBY B NR indicator lights up. The system works for both decks at the same time.
To cancel the Dolby NR system, press the button again so that the indicator turns off.

To play both sides repeatedly — Reverse Mode
Press REVERSE MODE button so that the REVERSE MODE indicator in the display window (⇄) is lit. Reverse Mode works for both decks at the same time.

The tape automatically reverses at the end of a side and start playing the other side, and repeats the same process.
To cancel Reverse Mode, press the REVERSE MODE button again so that the indicator turns to ⇄.

Locating the beginning of a song — Music Scan

You can use Music Scan to locate the beginning of a song. Music Scan searches for blank portions that usually separate recorded songs, then plays the next song.

To find the beginning of the current song
During play, press ⏮/⏭ PREV/NEXT in **the opposite direction** to the tape play.
Searching stops automatically at the beginning of the current song, and the current song starts again automatically.
To find the beginning of the next song
During play, press ⏮/⏭ PREV/NEXT in **the same direction** as the tape play.
Searching stops automatically at the beginning of the next song, and the next song starts automatically.
On the remote control, to locate the beginning of the current or next song, press ⏮/⏭ buttons.

Notes
- You may stop music scan and start play again by pressing the TAPE button.
- **Music Scan works by detecting a 4-second long blank between each song, so it won't work well in the following cases.**
  - No blank at the beginning of a song.
  - Noise (often caused by much use or poor quality dubbing) which fills the blank with noise.
  - Long, very soft passages or pauses in a song.

Fast forward/Reversing tapes

To fast forward/reverse tapes, first press the ■ STOP/CANCEL button and the one of the ⏮/⏭ PREV/NEXT buttons.

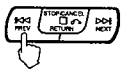

(Front panel)

On the remote control, press the ■ STOP and then one of the ◀◀/▶▶ buttons.

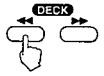

(Remote control)

Continuous play
Playing tapes in deck A and B

You can play tapes in deck A and B continuously.

Operation
1. **Press EJECT for both decks.**
2. **Put cassettes into both decks, with the exposed part of the tape down.**
3. **Close the cassette holders gently.**
4. **Press TAPE and the Player will start the side the tape indicator shows.**
   The direction indicator starts blinking and tape play starts. When a tape finishes playing, the unit checks to see if a tape is in the other deck. If one is there, it automatically starts playing it.

To stop play, press the ■ STOP/CANCEL button.

Notes

— How Continuous Play actually works —

When Reverse Mode is on:
- After the reverse side of the tape finishes playing, the tape in the other deck starts playing. The tapes continue to play in the sequence below.

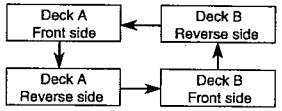

When Reverse Mode is off:
- After one side of the tape finishes playing, the tape stops.

RECORDING

You can record using deck B, connected VCR and connected digital recording equipment.

Recording tapes

You can use type I and II tapes for recording.
You can only record on deck B.

Operation
1. **Press EJECT for the deck B.**
2. **Put in the cassette to record onto, with the exposed part of the tape down.**
3. **Close the cassette holder gently.**
4. **Press REC START/STOP so that the REC indicator lights up.**

5. **Start playing the source — FM, AM, CD player, deck A, or auxiliary equipment connected to VCR and AUX jacks by pressing the desired button.**
   When the source is deck A, you can also use the dubbing method. (See "Dubbing Tapes.")

To stop recording, press REC START/STOP button.
To stop recording temporarily, press REC PAUSE on the remote control.
To resume recording, press REC START/STOP button or ◀/▶ button on the remote control.
To record a tape with the Dolby NR system (except when the source is deck A)
Press DOLBY B NR to activate the Dolby B NR system.
The DOLBY B NR indicator lights up.
To cancel the Dolby NR system, press the button again so that the indicator turns off.
To record on both sides — Reverse Mode
Press REVERSE MODE so that the REVERSE MODE indicator ⇄ lights up.
When the source is deck A, see "Dubbing Tapes."
To cancel Reverse Mode, press the REVERSE MODE button again so that the indicator ⇄ turns off.
To record a tape with the sound modes (except when the source is deck A)
Before you start recording, select the sound mode you want by pressing the SOUND MODE button. You can record in any one of the modes.

CAUTION
The use of the 120 minutes long or thinner tape is not recommended, since characteristic deterioration may occur and this tape easily jams in the pinch-rollers and the capstans.

Dubbing tapes

You cannot dub tapes with the sound modes.
It is preferable that the tape type (type I or II) you record from be the same as the tape type you record onto when dubbing tapes.

Operation
1. **Put the source cassette in deck A, and the cassette to be recorded onto in deck B.**
2. **Press DUBBING button on the front panel.**

Dubbing starts. (The System will automatically find the begining of both tape and start to record).

To stop during dubbing, press REC START/STOP button.

To dub both sides — Reverse Mode
Press REVERSE MODE so that the Reverse Mode indicator ⇄ is lit, and start from the front sides for both deck A and B.
To cancel Reverse Mode, press the REVERSE MODE button again so that the indicator turns to ⇄.

Note
The Dolby NR system is inactive during dubbing
The dubbed tape automatically contains the same processing as the source tape. The DOLBY B NR indicator automatically turns off.

To protect your recording
Cassettes have two small tabs on the back to protect unexpected erasure or re-recording.
To protect your recording, remove these tabs.
To re-record on a protected tape, cover the holes with adhesive tape.
When using type II tape, be careful not to cover the holes used to detect the tape type.

(No. 20578) 1-19

CA-V805T

Recording on the connected equipment

You can record sounds on the VCR connected to the MD DCC OUT (REC) jacks on the rear panel. Also you can record digital sounds through the DIGITAL OUT OPTICAL terminal.
Before you start recording, refer also to the manuals supplied for the connected equipment.

Operation
Start playing the source and recording.
For recording on VCR:
You can select the sources; FM, AM, deck A and B, CD player, and the equipment connected to the AUX jacks.
When you start recording from the equipment connected to the AUX jacks, select (VCR/AUX).
Refer to page 3 and the manual for the connected equipment.
For recording on the digital equipment; — MD, DCC, DAT
You can play only the conventional audio CD and the CD-G as the source.

Notes
- You cannot adjust the recording level manually
  Recording level is fixed.
- You can not record on the connected digital equipment from video CDs.

CAUTION
- **It may be unlawful to record or playback copyrighted material without the consent of the copyrighted owner.**
- If recording you make have excessive noise or static, the unit may be too close to a TV. Increase the distance between the TV and the unit.

CD edit recording

You have 2 ways, except the standard method described on page 23, to record from disc (conventional audio CD, CD-G, and video CD without the PBC function) to tape.
CD Direct Recording — Everything on the disc onto the tape in the order it is on the disc.
Auto Edit Recording — The unit arrange which tracks to be recorded on which side of the tape, so a track isn't cut off at the end of the tape.

CD Direct Recording

This is the easiest way of recording a disc.

Operation
1. **Put the cassette to record onto in deck B.**
2. **Place a disc correctly on the circle of the disc tray, with its label side up.**
3. **Press CD REC START.**

(Front panel)

"CD REC" appears in the display.
Deck B starts recording and the CD player starts playing.

To stop during CD Direct Recording, press ■ STOP/CANCEL button.
When you press ■ STOP/CANCEL button, you can make a 4-second blank at the end of recording.

Note
— How CD Direct Recording Actually works —
Deck B records tracks in the order on the disc. If the tape ends while recording a track, deck B rewinds the tape to the beginning of the track and re-records it so that it fades out naturally at the end of the tape.
If recording is continued to the reverse side, a 10 second blank is created at the beginning of the reverse side. Then the reverse side starts from last track recorded on the front side and will fade out at the end of the tape again.

To record a tape with the Dolby NR system
Press DOLBY B NR to activate the Dolby B NR system.
The DOLBY B NR indicator is shown on the display.
To cancel the Dolby NR system, press the button again so that the indicator turns off.
To record on both sides — Reverse Mode
Press REVERSE MODE so that the REVERSE MODE indicator is lit on the display.
To cancel Reverse Mode, press the button again so that the indicator turns off.
To record a tape with the sound modes
Before you start recording, select the sound mode you want.
You can record with any one of the preset the sound modes.

Notes
- **You can record a set of programmed tracks using CD Direct Recording.**
  Before you press CD REC START, make a program as you want.
  To make a program, see page 14.
- **You can use Repeat Play during CD Direct Recording.**
  To repeat a disc or a track, see page 14.

Auto Edit Recording

The unit automatically arranges the tracks on a disc to fit the tape. The selection of which tracks go on which side of the tape is based on the lengths of the tracks and the length of the tape.

Operation

1. **Put the cassette to be recorded onto in deck B.**
2. **Place a disc correctly in the circle of the disc tray, with its label side up.**
3. **Press REVERSE MODE so that the REVERSE MODE indicator (⇄) lights up.**
   If you want to record on only one side of a tape, turn off the REVERSE MODE indicator.
4. **Press EDIT. "DISC ?" appears in the display, and then the tape length best to use appears.**

(Front panel)

5. **Press the disc button of the disc you want to record from.**

   If the tape you want to record on is a different length, press I◄◄/►►I PREV/NEXT. The tape length shown in the display cycles as follows so you can select a different tape length.

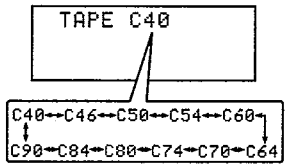

6. **Press SET when the length tape you want to use appears in the display.**
   The display shows which tracks go on the front side (A) and which on the reverse side (B).

(Front panel)

   Each time you press the button, the display alternates to show the tracks for the front side (A) and those for the reverse side (B).

7. **Press CD REC START.**
   "TAPE SIDE-A STAND-BY" appears in the display.

   Deck B rewinds the tape and starts recording. The CD player starts playing about 10 seconds later.
8. **When recording is complete, the player will stop.**

To cancel the Auto Edit setting, press the PROGRAM/RANDOM button.
To stop during Auto Edit Recording, press ■ STOP/CANCEL on the front panel.
When you press ■ STOP/CANCEL, you make a 4-second blank at the end of recording.
To record a tape with the Dolby NR system
Press DOLBY B NR to activate the Dolby B NR system.
The DOLBY B NR indicator lights up.
To cancel the Dolby NR system, press the button again so that the indicator turns off.
To record a tape with the sound modes
Before you start recording, select the sound mode you want. You can record with any one of the sound modes.

Notes

- **You can program up to 16 tracks for each side of the tape**
  However, you cannot program a track the number of which on the disc is greater than 31.
- **If you use a tape shorter than the total playing time of selected tracks**
  The last recorded tracks will be fading out at the ends of both sides.

— How Auto Edit Recording actually works —
The unit selects which tracks go on which side of the tape so that the total playing time of the selected tracks is within the tape length and that no track is cut off while recording.
Before recording starts, the deck B automatically rewinds the tape to the beginning of the front side and creates a 10 second blank.
If recording is continued to the reverse side, a 10 second blank is also created at the beginning of the reverse side.

KARAOKE

Singing along — Karaoke

You can enjoy singing along using conventional audio CDs (or tapes), CD-Gs and video CDs.

Singing along with conventional audio CDs or tapes — Vocal Masking

When playing a stereo recorded source such as conventional audio CDs or tapes, you can reduce the lead vocal and replace it with your voice by singing into the microphone. Usually stereo recorded CDs are the best source for Vocal Masking.

What Vocal Masking actually does
Vocal Masking reduces the lead vocal (but never erases it).
The following sources are not good for Vocal Masking.

- Monaural sources
- Multiplex karaoke tapes and discs
- Poorly dubbed tapes
- Stereo recorded source, but with only few instruments, with duets, or with strong echo

Operation

1. **Turn down MIC LEVEL fully.**
2. **Connect the microphone (not supplied) into the MIC jack on the front panel.**
3. **Play the source — a CD, a tape, or other.**

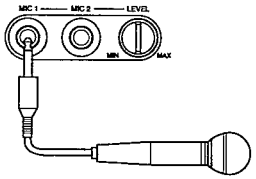

4. **Press the KARAOKE button until "V. MASK" appears on the display.**

5. **Turn MIC LEVEL and VOLUME to adjust the microphone level and the sound output level.**
6. **Sing into the microphone.**

Note
You can adjust both MIC 1 and MIC 2 with the MIC LEVEL knob.

To apply echo to your voice
While holding down the SHIFT button, press DIGITAL ECHO on the remote control.
Each time you press the button, the amount of echo applied changes and the display shows as follows:

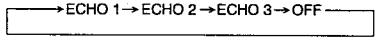

ECHO 1: A little echo is applied.
ECHO 2: More amount of echo than ECHO 1.
ECHO 3: Strong echo is applied.
OFF: No echo is applied.

To record yourself singing along
See "Microphone Mixing" on page 30.

Notes

- **For preventing howling and squealing when using the microphone**
  Adjust MIC LEVEL and VOLUME, and try not to point the microphone at the speakers.
- **When you are not going to use the microphone**
  Keep MIC LEVEL set to MIN, and disconnect the microphone.

(No. 20578) 1-21

CA-V805T

Singing along with Multiplex Karaoke Video CDs without the PBC function or Multiplex Karaoke CD-Gs

If the disc you are going to play is a multiplex karaoke disc, the instrumental parts are recorded on the left channel and the vocal parts are recorded on the right channel. So, you can select the output sounds — whether the instrumental parts only or both of the instrumental parts and vocal parts.
Before playing a disc, turn on the TV and select the video input so that you can view the pictures from the CD player.

Operation

1. **Turn down MIC LEVEL fully.**
2. **Connect the microphone (not supplied) into the MIC jack on the front panel.**
3. **Press ▲ on any of the disc trays.**
   The unit automatically turns on and the disc tray comes out.
4. **Place a disc correctly in the circle of the disc tray, with its label side up.**
5. **Press (CD) or ►/SELECT button on the remote control.**
   The disc tray closes.
   - When you play a video CD, "VIDEO CD" appears in the display and play starts from the first track.
   - When you play a CD-G, "GRAPHICS" appears in the display and play starts from the first track.
6. **Press KARAOKE to select the output sound — whether the instrumental parts only or both of the instrumental parts and the vocal parts.**

(Display window)

Playing a multiplex sound CD

- This function is used for multiplex sound discs.
- **By pressing the KARAOKE button, channel multiplexing modes are cycled as shown below.**

→REPLACE →Lch MONO→ Rch MONO →V.MASK→
(Display window)

7. **Turn MIC LEVEL and VOLUME to adjust the microphone level and the sound output level.**
8. **Sing into the microphone.**

To stop during play, press ■ STOP/CANCEL.
The blue screen appears on the TV screen.

To stop play and remove the disc, press ▲.
After singing, restore the stereo effect by pressing KARAOKE. So, you will not lose the stereo effect when you play a stereo disc next time.

To select the CD graphic channel
If the CD-G has several patterns (up to 15) of graphics (they are called "graphic channels"), you can select the one you want. You can find out whether or not the CD-G has graphic channels by looking at its package or the printed surface of the disc.

To change the graphic channel, press CD-G CHANNEL repeatedly until the graphic channel you want appears on the TV screen.

To apply echo to your voice

Operation

1. **Press DIGITAL ECHO on the remote control while holding down the SHIFT button.**

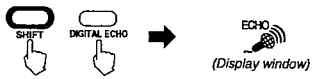

(Display window)

2. **Each time you press the button, the amount of echo applied changes and the display shows as follows:**

→D.ECHO 1→ D.ECHO 2 →D.ECHO 3→ OFF

ECHO 1: A little echo is applied.
ECHO 2: More amount of echo than ECHO 1.
ECHO 3: Strong echo is applied.
OFF: No echo is applied.

To select a particular track or to use other basic operations
See "Basic Operations" on page 12.

To record yourself singing along
See "Microphone Mixing" on page 30.

Notes

- **You can use Vocal Masking only on a multiplex Karaoke disc.**
- **To prevent howling and squealing when using the microphone**
  Adjust MIC LEVEL and VOLUME, and try not to point the microphone at the speakers.
- **When you are not going to use the microphone**
  Keep MIC LEVEL set to MIN, and disconnect the microphone.

Singing along with Multiplex Karaoke Video CDs with the PBC function

Before playing a disc, turn on the TV and select the video input so that you can view the pictures from the CD player.

Operation

1. **Turn down MIC LEVEL fully.**
2. **Connect the microphone (not supplied) into the MIC jack on the front panel.**
3. **Press ▲.**
   The System automatically turns on and disc tray comes out.
4. **Place a disc correctly in the circle of the disc tray, with its label side up and press ▲ again. The disc tray will close.**
5. **Press the disc button next to the disc you want to play.**
6. **When the menu appears on the TV screen, select the song you want by using the number buttons on the remote control unit.**
7. **Press the KARAOKE button to select the output sound — whether the instrumental parts only or both the instrumental parts and the vocal parts.**
   Each time you press the button, the sound changes and the display window shows as follows:

→V.MASK→ REPLACE →Lch MONO →Rch MONO

Lch MONO:	only the instrumental parts
Rch MONO:	only the vocal parts
VOCAL MASK:	vocal is to be muted
REPLACE:	your voice replace the vocal

8. **Turn MIC LEVEL and VOLUME to adjust the microphone level and the sound output level.**
9. **Singing into the microphone.**

To stop Menu Play, select the item in the menu (such as "End" or "Quit") which can quit playback. If there is not such a selection, press and hold RETURN for more than 2 seconds.
To stop play and remove the disc, press ▲.

To apply echo to your voice
Hold down the SHIFT button and press DIGITAL ECHO on the remote control.
Each time you press the button, the amount of echo applied changes and the display shows as follows:

→ECHO 1→ ECHO 2 →ECHO 3→ OFF

ECHO 1: A little echo is applied.
ECHO 2: More amount of echo than ECHO 1.
ECHO 3: Strong echo is applied.
OFF: No echo is applied.

To use other operations
See "Various Unique Functions" on page 14.

To use slow motion or frame-by-frame playback for video CDs
Press the II STILL button while holding down to SHIFT button on the remote control.

To record yourself singing along
See "Microphone Mixing" on page 30.

Notes

- **You cannot use Vocal Masking on a multiplex karaoke disc.**
- **To prevent howling and squealing when using the microphone**
  Adjust MIC LEVEL and VOLUME, and try not to point the microphone at the speakers.
- **When you are not going to use the microphone**
  Keep MIC LEVEL set to MIN, and disconnect the microphone.

Adjusting music key

Hold down the SHIFT button and press the KEY CONTROL buttons on the remote control (♭ 1 - 6 or # 1 - 6) to change the key in which the music plays.

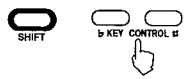

Note
Once the music key is adjusted, the key level will not return to the previous level after playing a song.

USING THE MICROPHONE

You can use the microphone (not supplied) for two kinds of recording.

Microphone mixing

You can record sound through the microphone by mixing sound from other sources.
When recording on deck B, you cannot use deck A as the playing source. (But you can use deck A as the playing source when recording on the connected VCR.)

Operation

1. **Turn down MIC LEVEL fully.**
2. **Connect the microphone (not supplied) into the MIC jack on the front panel.**

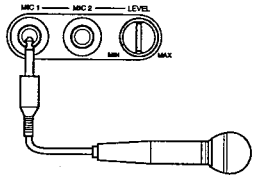

3. **Play the source — a CD, a tape, and others.**
4. **Turn MIC LEVEL and VOLUME to adjust the microphone level and the sound output level.**

5. **Sing into the microphone.**
6. **Start recording.**
   You can record using both deck B and the connected VCR.
   When recording on deck B, see "Recording Tapes" on page 23.
   When recording on the VCR, refer to the manual supplied for it.

Recording only though the microphone

You can record sound picked up by the microphone only.
See page 23 to prepare for recording.

Operation

1. **Turn down MIC LEVEL fully.**
2. **Connect the microphone (not supplied) into the MIC jack on the front panel.**
3. **Turn MIC LEVEL and VOLUME to adjust the microphone level and the sound output level.**
4. **Press the REC START/STOP button, the indicator turns red and recording will start.**

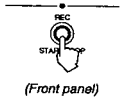

(Front panel)

5. **Sing into the microphone or pick up sound using the microphone.**

Notes

- You can record using both deck B and the connected MD.
- **To prevent howling and squealing when using the microphone**
  Adjust MIC LEVEL and VOLUME, and try not to point the microphone at the speakers.
- **When you are not going to use the microphone**
  Keep MIC LEVEL set to MIN, and disconnect the microphone.

USING THE TIMER

English

There are three timers available — Recording Timer, Daily Timer and Sleep Timer.
Before using the timers, you need to set the clock built into the System.

Setting the clock

Setting the clock for the first time
After you plug the system in you need to set the clock before you can set any of the timers.

Operation

1. **Press the CLOCK button once.**

2. **The indicators below will start to blink.**

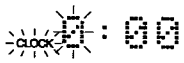

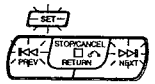

3. **Press the ▶▶I NEXT button to advance the hour. When you reach the right hour press the SET button.**
4. **Press the ▶▶I NEXT button to advance the minutes. When you reach the right minute press the SET button.**
5. **"CLOCK OK" will appear on the display.**

Note

Holding down the I◀◀/▶▶I PREV/NEXT buttons will advance/decrease the time by 10 minute intervals.

Using Recording Timer

With Recording Timer, you can make a tape of a radio broadcast automatically.
You can set Recording Timer whether the System is turned on or off.

Operation

1. **Place a tape in deck B and select the recording direction. See page 23.**
2. **Choose the radio station you wish to record. (The Player will remember the station.)**
3. **Press the TIMER button consecutively until "ON TIME" "– –" and "ONCE REC" blink.**

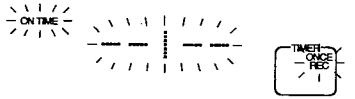

4. **Use the I◀◀/▶▶I PREV/NEXT buttons to set the hour and press SET. Then do the same for the minutes and press SET.**
5. **Use the I◀◀/▶▶I PREV/NEXT buttons to set the off time in the same way.**
6. **TIMER OK will appear on the screen and the Recording Timer is set.**

To reset the timer after the System has automatically turned off.
Turn the System on and press the timer button until ONCE REC appears in the display, and press SET. The once record timer is set again for the same time, and source.

Notes

- To turn off the Recording Timer, press the Timer button until ONCE REC blinks, and press STOP/CANCEL button. The ONCE RECORD feature is turned off.
  — How Recording Timer actually works —
  The System automatically turns on, tunes into the most recent station, and starts recording on deck B when the timer-on time comes. Then, when the timer-off time comes, the System automatically turns off.
  The timer-on time and timer-off time remain stored in memory until you reset them or disconnect the AC power cord.

(No. 20578) 1-23

CA-V805T

Setting the Daily Timer

With Daily Timer, you can wake up to music or your favorite radio program. You can set Daily Timer whether the System is turned on or off.

Operation

1. **Press the TIMER button once.**
   DAILY will start to blink on the display.
2. **Press TIMER once more to set the Daily Timer. The ON TIME and hour spaces will start to blink. Use the ⏮/⏭ PREV/NEXT buttons to forward or reverse the hours, and press SET.**
3. **Use the ⏮/⏭ PREV/NEXT buttons again to set the minutes, and press the SET button again.**
4. **The OFF TIME and hour spaces will start to blink. Set the OFF TIME the same way you set the ON TIME.**
5. **After you set the minutes of the OFF TIME, "SOURCE" will appear on the screen. Press the ⏮/⏭ PREV/NEXT button to select the source you wish to use.**
   To select a source, press the ⏮/⏭ PREV/NEXT buttons and different sources wil blink in the display. When the source you want to use is blinking press the SET button.
   CD: When you choose CD as a source "DISC –" will appear in the display. To choose other discs use the ⏮/⏭ PREV/NEXT buttons. When the correct disc is displayed press the SET button.
   Next "TRACK – –" will appear in the display. Use the ⏮/⏭ PREV/NEXT buttons to choose the track you want to start from.
   Next, "VOLUME" will appear in the screen. Use the ⏮/⏭ PREV/NEXT buttons to choose the volume you want. Now "TIMER OK" will appear in the display and the timer is set.
   TAPE: When you choose tape as a source, "VOLUME" will appear in the display. Adjust the volume with the ⏮/⏭ PREV/NEXT buttons. Now "TIMER OK" will appear in the display. (If tapes are in both decks when the timer comes on the System will play deck B first.)
   FM or AM: When you choose FM or AM as a source, "VOLUME" will appear in the display. Adjust the volume with the ⏮/⏭ PREV/NEXT buttons and press SET. Now "TIMER OK" will appear in the display.

To change the source or time for Daily Timer, press the TIMER button and then press it again and "ON TIME" and the time will start to blink. Now you can reset the timer and source.
To cancel the Daily Timer, press the TIMER button and then press the STOP/CANCEL button while "DAILY" is blinking on the display.
To turn the Daily Timer back on, press the TIMER button and then press the SET button while "DAILY" is blinking on the display.

Note

- **If there is a power failure**
  The clock loses the setting and the display shows "0:00." You need to reset the clock.

Setting the Sleep Timer

With Sleep Timer, you can fall asleep to music.
You can set Sleep Timer when the unit is turned on.

Operation

1. **Press SLEEP on the remote control.**
   The SLEEP indicator starts blinking in the display. Each time you preset the button, the time length changes as follows:

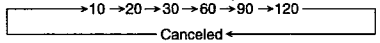

2. **Wait for about 6 seconds after specifying the time length.**
   The SLEEP indicator stops blinking and remains lit.

To check the remaining time until the timer-off time, press SLEEP once so that the remaining time until the shut-off time appears for about 5 seconds.
To change the timer-off time, press SLEEP repeatedly until the desired time length appears in the display.
To cancel the Sleep Timer, press SLEEP repeatedly so that the SLEEP indicator goes off in the display or turn off the System.

Note

The System automatically turns off after the specified time length passes.

Timer priority

Since each timer can be set separately, you may wonder what happens if the setting for these timers overlap.
Here are the priorities for each timer.

Recording Timer has priority over Daily Timer and Sleep Timer.
If the Daily Timer is set to come on while the Recording Timer is operating, the Daily Timer will not come on at all.

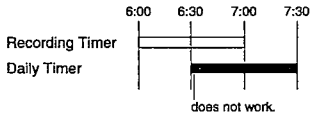

If Recording Timer is set to come on while the Sleep Timer is operating, the Sleep Timer will be canceled several seconds before Recording Timer comes on.

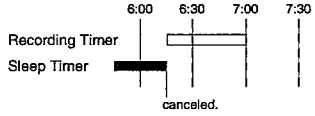

Sleep Timer has priority over Daily Timer.
If Daily Timer is set to come on while the Sleep Timer is operating, the Daily Timer will not come on at all.

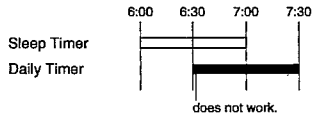

Therefore, the priority is like this —

Recording Timer > Sleep Timer > Daily Timer

MAINTENANCE

Handling compact discs

When handling a compact disc, do not touch the surface of the disc (reflective silver side — the side without the label).
Since compact discs are made of plastic, they are easily damaged. If a disc gets dirty, dusty, scratched or warped, the sound will not be picked up correctly and, in addition, such a disc may cause the CD player to malfunction.

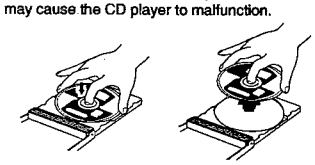

Even on label side
Do not damage the label side, stick paper to or use any adhesive on its surface.

Storage
Make sure that discs are kept in their cases. If discs are piled one on top of another without their protective cases, they can be damaged. Do not put discs in a location where they may be exposed to direct sunlight, or in a place where the humidity or temperature is high. Avoid leaving discs in your car!

Maintenance of discs
If there are fingerprints or other dirt adhering to a disc, wipe it with a soft dry cloth, moving from the center outwards.
If a disc is difficult to clean, wipe it with a cloth moistened with water. Never use record cleaners, petrol, alcohol or any anti-static agents.

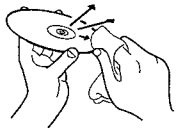

CAUTION
Sometimes during play noise or images may be garbled. This is sometimes due to the disc. (It may not be up to industry standards.)
These symptom are caused by the discs, not by the malfunction of the System.
DO NOT use any solvent — such as conventional record cleaner, spray, thinner, or benzine — to clean the disc.

Handling cassette tapes

- If the tape is loose in its cassette, take up the slack by inserting a pencil in one of the reels and rotating.
- If the tape is loose, it may get stretched, cut, or caught in the cassette.

- Be careful not to touch the tape surface.

- Avoid the following places to store the tape:
  — In dusty places
  — In direct sunlight or heat
  — In moist areas
  — Near a magnet

Cassette decks

If the heads, capstans, and pinch-rollers of the cassette decks become dirty, the following will occur:
- Impaired sound quality
- Discontinuous sound
- Fading
- Incomplete erasure
- Difficulty in recording

To clean the heads, capstans, and pinch-rollers
Use a cotton swab moistened with alcohol.

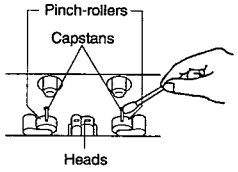

To demagnetize the heads
Turn off the unit, and use a head demagnetizer (available at electronics and record shops).

TROUBLESHOOTING

Troubleshooting

If you are having a problem with your System, check this list for a possible solution before calling for service.
If you cannot solve the problem from the hints given here, or the System has been physically damaged, call a qualified person, such as your dealer, for service.

Symptom	Cause	Action
No sound is heard.	Connections are incorrect or loose.	Check all connections and make corrections. (See pages 2 to 4.)
Hard to listen to broadcasts because of noise.	• Antennas are disconnected. • The AM loop antenna is too close to the System. • The FM antenna is not properly extended and positioned.	• Reconnect the antennas correctly and securely. • Change the position and direction of the AM loop antenna. • Extend the FM antenna at the best position.
The disc sound is discontinuous.	The disc is scratched or dirty.	Clean or replace the disc. (See page 1.)
The disc sound loses stereo effect.	The Lch MONO mode is activated.	Press KARAOKE on the front panel to restore the stereo effect.
The pictures from the CD player is distorted.	When you pause or advance the pictures manually, the pictures are distorted. This is not a malfunction.	———
The disc tray does not open or close.	The AC power cord is not plugged in.	Plug the AC power cord.
The disc does not play.	The disc is placed upside down.	Place the disc with the label side up.
The cassette holders cannot be opened.	Power supply from the AC power cord has been cut off while the tape was running.	Turn on the System.
Impossible to record.	Small taps on the back of the cassette are removed.	Cover the holes with adhesive tape.
Operations are disabled.	The built-in microprocessor may malfunction due to external electrical interference.	Unplug the AC power cord and then plug it back in.
Unable to operate the System from the remote control.	• The path between the remote control and the remote sensor on the unit is blocked. • The batteries are exhausted.	• Remove the obstruction. • Replace the batteries.

(No. 20578) 1-25

CA-V805T

SPECIFICATIONS

CA-V805T

Amplifier		
Output power (IEC268-3/DIN)	50 watts per channel, min. RMS, both channels driven into 6Ω at 1kHz with no more than 0.9% total harmonic distortion. (Sub speakers are driven at 16Ω)	
Audio input sensitivity and impedance (at 1kHz)	MD/DCC AUX MIC 1, MIC 2	900mV/47kΩ 300mV/47kΩ 2.0mV/10kΩ (mini plug type)
Audio output level/impedance (at 1kHz)	MD/DCC	200mV/2.0kΩ
Video output level (at 1 Vp-p input)	VIDEO OUT	1.0Vp-p/75Ω
Speakers/ Impedance	main speakers sub speakers	6 – 16Ω 16Ω
Tuner		
FM tuning range	87.50 – 108.00MHz	
AM tuning range	531 – 1602kHz (at 9kHz channel spacing) 530 – 1600kHz (at 10kHz channel spacing)	
Cassette deck		
Frequency response	Normal (type 1) CrO_2 (type 2)	30 – 15000Hz 30 – 16000Hz
Wow and flutter	+0.3% W.PEAK (EIAJ) 0.15% WRMS	
CD player		
Wow and flutter	Unmeasurable	
Available disc type	Audio CD, CD-G, video CD	
General		
Power requirements	AC110/127/220/230 – 240V ∿, adjustable with the voltage selector, 50/60Hz	
Power consumption	110 watts (during operation) 20 watts (during standby)	
Max. power consumption	440 watts (Taiwan only)	
Dimensions (approx.)	245 x 280 x 352.5 mm (W/H/D) 9 -11/16 x 10 -1/16 x 13 -15/16 in.	
Mass (approx.)	7.8 kg (17.2lbs.)	

INTRODUCTIONS

**We would like to thank you for purchasing one of our JVC products.
Before operating this System,
read this manual carefully and
thoroughly to obtain the best possible performance from your System,
and retain this manual for future reference.**

About this manual

This manual is organized as follows:

- The manual mainly explains operations using the buttons and controls on the System. You can also use the buttons on the remote control if they have the same or similar names (or marks) as those on the System.
  If operation using the remote control is different from that of using the System, it is then explained.
- Basic and common information that is the same for many functions is grouped in one place, and is not repeated in each procedure. For instance, we do not repeat the information about turning on/off the System, setting the volume, changing the sound effects, and others, which are explained in the section "Common Operations" on page 10.
- The following marks are used in this manual:

CAUTION:
Gives you warnings and cautions to prevent from a damage or risk of fire or electric shock.
Also gives you information which is not good for obtaining the best possible performance from the System.

Notes:
Gives you information and hints you had better know.

Precautions

Installation

- Install in a place which is level, dry and neither too hot or too cold — between 5°C (41°F) and 35°C (95°F).
- Install the System in a location with adequate ventilation to prevent internal heat built-up in the System.
- Leave sufficient distance between the System and the TV.
- Keep the speakers away from the TV to avoid interference with TV.

CAUTION
DO NOT install the System in a location near heat sources, or in a place subject to direct sunlight, excessive dust or vibration.

Power sources

- When unplugging from the wall outlet, always pull the plug, not the AC power cord.

CAUTION
DO NOT handle the AC power cord with wet hands.

Moisture condensation
Moisture may condense on the lens inside the System in the following cases:

- After starting the heating in the room
- In a damp room
- If the System is brought directly from a cold to a warm place

should this occur, the System may malfunction. In this case, leave the System turned on for a few hours until the moisture evaporates, unplug the AC power cord, and then plug it in again.

Others

- Should any metallic object or liquid fall into the System, unplug the System and consult your dealer before operating any further.
- If you are not going to operate the System for an extended period of time, unplug the AC power cord from the wall outlet.

CAUTION
DO NOT disassemble the System since there are no user serviceable parts inside.

If anything goes wrong, unplug the AC power cord and consult your dealer.

Main (AC) Line Instruction (not applicable for Europe, U.S.A., Canada, Australia and U.K.)

主 (AC) 電源線路説明（不適用於歐洲、美國、加拿大、澳洲及英國型號）

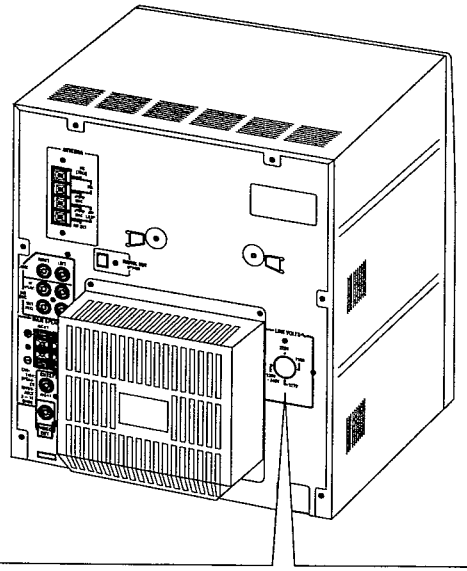

IMPORTANT for main (AC) line

BEFORE PLUGGING IN, do check that your main (AC) line voltage corresponds with the position of the voltage selector switch provided on the outside of this equipment and, if different, reset voltage selector switch, to prevent damage or risk of fire/electric shock.

有關主(AC)電源線路的重要事項

接插電源以前，務請檢查當地的主(AC)電源線路電壓是否和位於本機外面的電壓選擇開關設定的位置一致。如果不一致，即重新設定電壓選擇開關使符合當地電壓，以免損壞機器或引起火災/觸電的危險。

EN, CH

JVC

VICTOR COMPANY OF JAPAN, LIMITED

0296TTYUBNJES

(No. 20578) 1-27

CA-V805T

Description of the ICs

■ MN172412K8R(IC701) : System Controller

1. Terminal layout

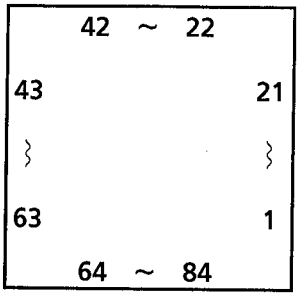

2. Key matrix

	KEY IN 0 (49pin)	KEY IN 1 (50pin)	KEY IN2 (51pin)		KEY IN 0 (49pin)	KEY IN 1 (50pin)	KEY IN2 (51pin)
1G (3pin)	PROGRAM/ RANDOM (S701)	EDIT (S702)	REPEAT RANDOM (S703)	6G (8pin)	CD (S716)	REC (S717)	◀◀ (S718)
2G (4pin)	OPEN / CLOSE 1 (S704)	OPEN / CLOSE 2 (S705)	OPEN / CLOSE 3 (S706)	7G (9pin)	FM / AM (S719)	DUBBING (S720)	STOP / CLEAR (S721)
3G (5pin)	DISC 1 (S707)	DISC 2 (S708)	DISC 3 (S709)	8G (10pin)	TAPE (S722)	DOLBY B NR (S723)	▶▶ (S724)
4G (6pin)	KARAOKE (S710)	SOUND MODE (S711)	BASS (S712)	9G (11pin)	MD/ AUX (S725)	REVERSE MODE (S726)	▶▶| (S727)
5G (7pin)	DEMO / SET (S713)	CD REC START (S714)	|◀◀ (S715)	10G (12pin)	POWER (S728)	A/B (S729)	CLOCK TIMER (S730)

3. Terminal Function

Pin No.	Symbol	I/O	Functions and Operations	Pin No.	Symbol	I/O	Functions and Operations
1	S11	O	FL Segment control output	43	DATA	O	Data signal input to IC702,401,081
2	S12	O	FL Segment control output	44	RMOUT	O	Infrared ray LED output for IllumiMagic compu play
3	1G	O	FL Grid control output(Key matrix output)	45	COMCLK	I	Clock signal input from IC751
4	2G	O	FL Grid control output(Key matrix output)	46	COMDT1	I	Data signal input from IC751
5	3G	O	FL Grid control output(Key matrix output)	47	COMDT2	O	Data signal output for IC751
6	4G	O	FL Grid control output(Key matrix output)	48	RMIN	I	Remote control signal input
7	5G	O	FL Grid control output(Key matrix output)	49	KI0	I	Key matrix input
8	6G	O	FL Grid control output(Key matrix output)	50	KI1	I	Key matrix input
9	7G	O	FL Grid control output(Key matrix output)	51	KI2	I	Key matrix input
10	8G	O	FL Grid control output(Key matrix output)	52	COMRDY	I	Redy signal input from IC851
11	9G	O	FL Grid control output(Key matrix output)	53	CE	I	Chip enabie to IC481
12	10G	O	FL Grid control output	54	JOG IN 1	I	Input 1 of JOG Palse
13	11G	O	FL Grid control output	55	JOG IN 2	I	Input 2 of JOG Palse
14	12G	O	FL Grid control output(Key matrix output)	56	IFDATA	I	Data signal input from IC121
15	S13	O	FL Grid control output	57	TCLK	O	Clock signal output for IC121
16	S14	O	FL Grid control output	58	TDATA	O	Data signal output for IC121
17	S15	O	FL Segment control output	59	TCE	O	Thip eneble for IC121
18	S16	O	FL Segment control output	60	/INH	I	Inhibit signal input
19	S17	O	FL Segment control output	61	SPK	O	Speaker relay control signal output
20	S18	O	FL Segment control output	62	SCL	O	Clock signal output for IC401
21	V_{PP}	--	Power supply(-Vpp,,,)	63	SDA	O	Data signal output for IC401
22	S19	O	FL Segment control output	64	DSP STB	O	STB signal for IC081
23	S20	O	FL Segment control output	65	STB	O	STB signal for IC401
24	S21	O	FL Segment control output	66	S.MUTE	O	S.MUTE control signal
25	S22	O	FL Segment control output	67	POWER	O	Power ON/OFF control signal
26	S23	O	FL Segment control output	68	RESET	I	System reset signal input
27	S24	O	FL Segment control output	69	X1		Connection of the GND
28	S25	O	FL Segment control output	70	X2	---	
29	S26	O	FL Segment control output	71	VSS	---	Connection of the GND
30	S27	O	FL Segment control output	72	OSC2	---	Oscillation terminal (6MHz)
31	S28	O	FL Segment control output	73	OSC1	---	Oscillation terminal (6MHz)
32	S29	O	FL Segment control output	74	V_{DD}	---	Power supply(+5V)
33	S30	O	FL Segment control output	75	S1	O	FL Segment control output
34	S31	O	FL Segment control output	76	S2	O	FL Segment control output
35	S32	O	FL Segment control output	77	S3	O	FL Segment control output
36	S33	O	FL Segment control output	78	S4	O	FL Segment control output
37	S34	O	FL Segment control output	79	S5	O	FL Segment control output
38	S35	O	FL Segment control output	80	S6	O	FL Segment control output
39	S36	O	FL Segment control output	81	S7	O	FL Segment control output
40	STB	O	STB signal to IC702	82	S8	O	FL Segment control output
41	CLK	O	Clock signal to IC702,481,081	83	S9	O	FL Segment control output
42	SDI	I	Data signal input from IC481	84	S10	O	FL Segment control output

■ MN6433726SC11F (IC851) : Deck & CD Controller

1. Terminal layout

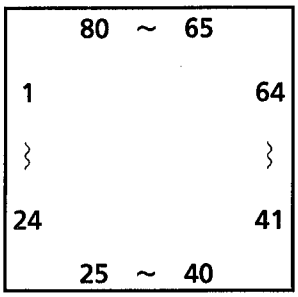

3. Pin Functions

Pin No.	Symbol	I/O	Function	Pin No.	Symbol	I/O	Function
1	F REC	I	FREC switch detect input	41		--	Connection to the VCC
2	BEQ	I	Play equalizer control	42		--	Connection to the VCC
3	R REC	I	RREC switch detect input	43		--	Connection to the VCC
4	BPACK	I	BPACKswitch detect input	44	RMT	O	Recording mute signal output
5	AVSS	--	Connection to the ground	45	PBEQ	O	Play equalizer select output
6	TEST	--	Connection to the ground	46	AMT	O	It is "H" when Deck A is not playing
7	X2	--	Non Connection	47	PB/REC	O	Rec. P.B select signal output
8	X1	--	Connection to the +5V	48	NR	O	It is "H" when NR recording
9	VSS	--	Connection to the ground	49	FADE	O	FADE mode control
10	OSC1	--	Osilaltion terminal	50	OMT	O	Dack mute signal output
11	OSC2	--	Osilaltion terminal	51	BPLZ	O	B mech.pranger control output
12	RESET	I	System reset signal input	52	APLZ	O	A mech.pranger control output
13	HREQ	I	Req signal to IC111	53	CAPN	O	Capstan (ON/OFF) control
14	DCS IN	I	DCS signal input	54	BMT	O	It is "H" when Deck B is not playing
15	DCS OUT	O	DCS signal output	55	REC	O	It is "H" when recording
16	SCK	O	CLock signal output for changer µ.-com	56	BIAS	O	REC bias ON/OFF control
17	CHST	O	Strove signal output for changer µ.-com	57	VCC	--	+5V
18	DATA	O	Data signal output for changer µ.-com	58	RESTSW	I	CD mech. rest switch input
19	REQI	I	Redy signal input from changer µ.-com	59	MLD	O	Non connection
20		--	Connection to the VCC	60	SOCK	O	Non connection
21		--	Connection to the VCC	61	MCLK	O	µ.-com comand clock signal output
22		--	Connection to the VCC	62	MDATA	O	µ.-com comand datasignal output
23	SENSE	--	PULL UP	63	DETECT	I	Disc detect input
24	DECKAI	O	Indication control	64	LSI ON	O	CD LSI Power output control
25	DECKBI	O	Indication control	65	VCDRST	O	Reset signal for IC111
26	REVI	O	Indication control	66	COMRDY	O	Redy signal output
27	FWDI	O	Indication control	67	COMCLK	O	µ.-com comand clock signal output
28	RECI	O	Indication control	68	COMDT1	O	Data 1 signal from IC701
29	STDBYI	O	Indication control	69	COMDT2	O	Data 2 signal for IC701
30	CDGI	O	Indication control	70	SRCLK	O	Srial data clock output
31	VCDI	O	Indication control	71	HDATA	I	Srial data I/O
32	SUBQ	I	Sub code and Q register signal input	72	VDATA	O	Srial data I/O
33		--	Connection to the ground	73	MREQ	O	Req signal output
34		--	Connection to the ground	74	STATUS	I	Status signal input
35	VCDEMP	O	VIDEO CD Emp.	75	LSIRST	O	Reset signal output
36	HRDY	I	Redy signal to IC111	76	AVCC	--	+5V
37	MSIN	I	Music scan signal input	77	AEQ	O	Bias current and Playing EQ control
38	PSWA	I	A mech. play switch input	78	APACK	I	APACKswitch detect input
39	APLS	I	A mech. reel palse input	79	PSWB	I	B mech. play switch input
40	VDISP	--	Connection to the ground	80	BPLS	I	B mech. reel palse input

■ UPD65612GB-165(IC801) : Changer Controller

1. Terminal Layout

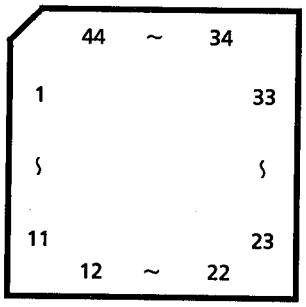

2. Pin Functions

Pin No.	Symbol	I/O	Function	Pin No.	Symbol	I/O	Function
1	NC	--	Non connection	23	2SSW	I	TRAY2 switch input signal
2	NC	--	Non connection	24	1SSW	I	TRAY1 switch input signal
3	NC	--	Non connection	25	NC	--	Non connection
4	OS1I	I	Oscillation terminal	26	CAM0	I	Cam switch input signal for LCAM
5	OS1O	O	Oscillation terminal	27	CAM1	I	Cam switch input signal for LCAM
6	OS2I	I	Oscillation terminal	28	CAM2	I	Cam switch input signal for LCAM
7	OS2O	O	Oscillation terminal	29	CAM3	I	Cam switch input signal for LCAM
8	NC	--	Non connection	30	CAM4	I	Cam switch input signal for RCAM
9	C25IN	I	Connected to C25OUT	31	CAM5	I	Cam switch input signal for RCAM
10	C25OUT	O	Connected to C25IN	32	CAM6	I	Cam switch input signal for RCAM
11	RESET	I	Reset signal input	33	CAM7	I	Cam switch input signal for RCAM
12	REQ	O	Output the "mecha. data request"	34	FIT	O	Connected to C50
13	DATA	I/O	Control,Status data I/O	35	C50	I	Connected to FIT
14	ST	I	Strobe signal input	36	LMUP	O	L motor control signal
15	CKS	I	Clock input	37	LMDWN	O	L motor control signal
16	SELECT	--	Connected to GND	38	C25	--	Non connection
17	GND	--	GND	39	VDD	--	Power supply terminal
18	CK	--	Connected to GND	40	C100	--	Non connection
19	1MSW	I	TRAY1 switch input signal	41	RMUP	O	R motor control signal
20	2MSW	I	TRAY2 switch input signal	42	RMDWN	O	R motor control signal
21	3MSW	I	TRAY3 switch input signal	43	NC	--	Non connection
22	3SSW	I	TRAY3 switch input signal	44	NC	--	Non connection

■ MN35510 (IC603) : DIGITAL SERVO & DIGITAL SIGNAL PROCESSER

1. Terminal Layout

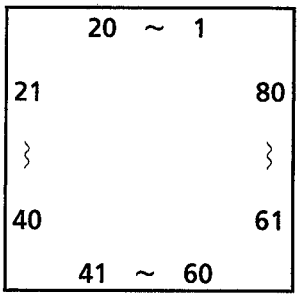

2. Block Diagram

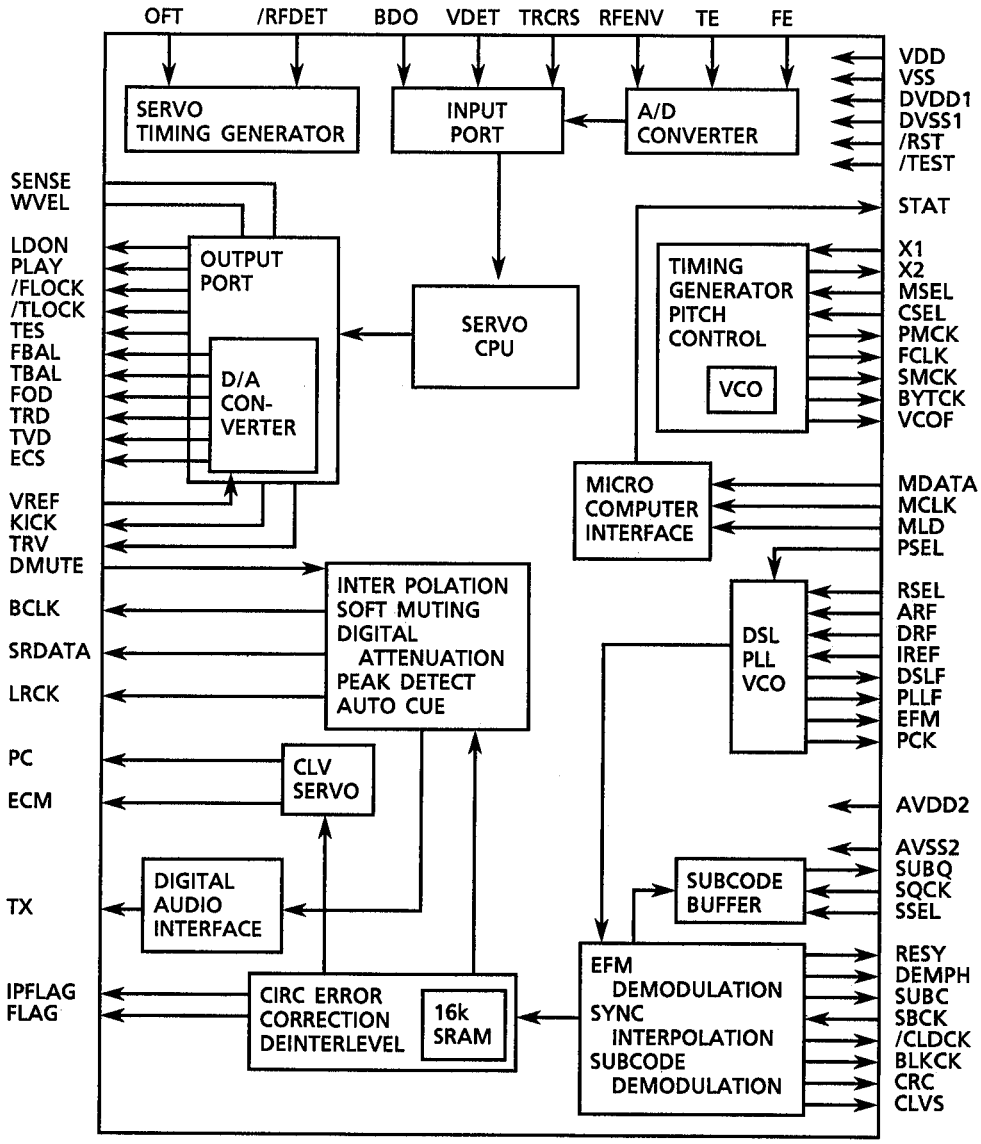

3. Description

Pin No.	symbol	I/O	Description	Pin No.	symbol	I/O	Description
1	BCLK	O	Bit clock output pin for SRDATA	41	TES	O	Tracking error shunt signal output (H;shunt)
2	LRCK	O	L/R distinction signal output	42	PLAY	—	Not used
3	SRDATA	O	Serial data output	43	WVEL	—	Not used
4	DVDD1	—	Power supply(Digital)	44	ARF	I	RF signal input
5	DVSS1	—	Not used	45	IREF	I	Reference current input pin
6	TX	O	Digital audio interface signal	46	DRF	I	Bias pin for DSL
7	MCLK	I	µ-com command clock signal input (Data is latched at signal's rising point)	47	DSLF	I/O	Loop filter pin for DSL
8	MDATA	I	µ-com command data input	48	PLLF	I/O	Loop filter pin for PLL
9	MLD	I	µ-com command load signal input	49	VCOF	—	Not used
10	SENSE	O	Sense signal output (OFT,FESL,NACEND,NAJEND,POSAD,SFG)	50	AVDD2	—	Power supply (Analog)
11	FLOCK	O	Lock signal for Focus L : pull	51	AVSS2	—	Connected to GND(Analog)
12	TLOCK	O	Lock signal for Tracking L : pull	52	EFM	—	EFM signal output
13	BLKCK	O	Subcode · block · clock signal output	53	PCK	—	Not used
14	SQCK	I	Outside lock for sub-code Q resister input	54	PDO	—	Not used
15	SUBQ	O	Sub-code Q-code output	55	SUBC	O	Subcode serial output data output
16	DMUTE	—	Connected to GND	56	SBCK	O	Clock input for subcode serial output
17	STATUS	O	Status signal (CRC,CUE,CLVS,TTSTOP,ECLV,SQOK)	57	VSS	—	Connected to GND(for X'tal cscillation circuit)
18	RST	I	Reset signal input (L :Reset)	58	X1	I	Input of 16.9344MHz X'tal oscillation circuit
19	SMCK	—	Not used	59	X2	O	Output of X'tal oscillation circuit
20	PMCK	—	Not used	60	VDD	—	Power supply(for X'tal cscillation circuit)
21	TRV	O	Traverse enforced output	61	BYTCK	—	Not used
22	TVD	O	Traverse drive output	62	CLDCK	O	Subcode · Frame · Clock signal output
23	PC	—	Not used	63	FCLK	O	Not used
24	ECM	O	Spindle motor drive signal (Enforced mode output) 3-State	64	IPPLAG	O	Interpolation flag output H : Interpolation
25	ECS	O	Spindle motor drive signal (Servo error signal output)	65	FLAG	—	Not used
26	KICK	O	Kick pulse output	66	CLVS	—	Not used
27	TRD	O	Tracking drive output	67	CRC	—	Not used
28	FOD	O	Focus drive output	68	DEMPH		Not used
29	VREF	I	Reference voltage input pin for D/A output block(TVD,FOD,FBAL,TBAL)	69	RESY	—	Not used
30	FBAL	O	Focus Balance adjust signal output	70	IOSEL	—	Connected to GND
31	TBAL	O	Tracking Balance adjust signal output	71	TEST	—	Pull up
32	FE	I	Focus error signal input(Analog input)	72	AVDD1	—	Power supply (Digital)
33	TE	I	Tracking error signal input(Analog input)	73	OUT L	O	Lch audio output
34	RF ENV	I	RF envelope signal input(Analog input)	74	AVSS1	—	Connected to GND
35	VDET	I	Vibration detect signal input(H : detect)	75	OUT R	O	Rch audio output
36	OFT	I	Off track signal input(H : off track)	76	RSEL	—	Pull up
37	TRCRS	I	Track cross signal input	77	CSEL	—	Connected to GND
38	RFDET	I	RF detect signal input (L : detect)	78	PSEL	—	Connected to GND
39	BDO	I	BDO input pin (H : drop out)	79	MSEL	—	Connected to GND
40	LDON	O	Laser ON signal output (H : on)	80	SSEL	—	Not used

■ BA6397FPW(IC602) : BTL DRIVER

1. Terminal Layout

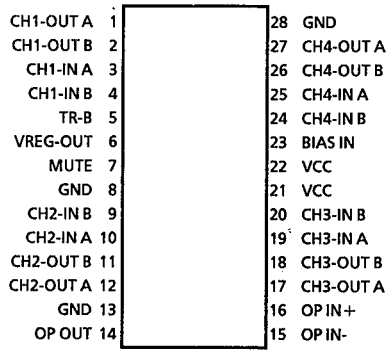

2. Block Diagram

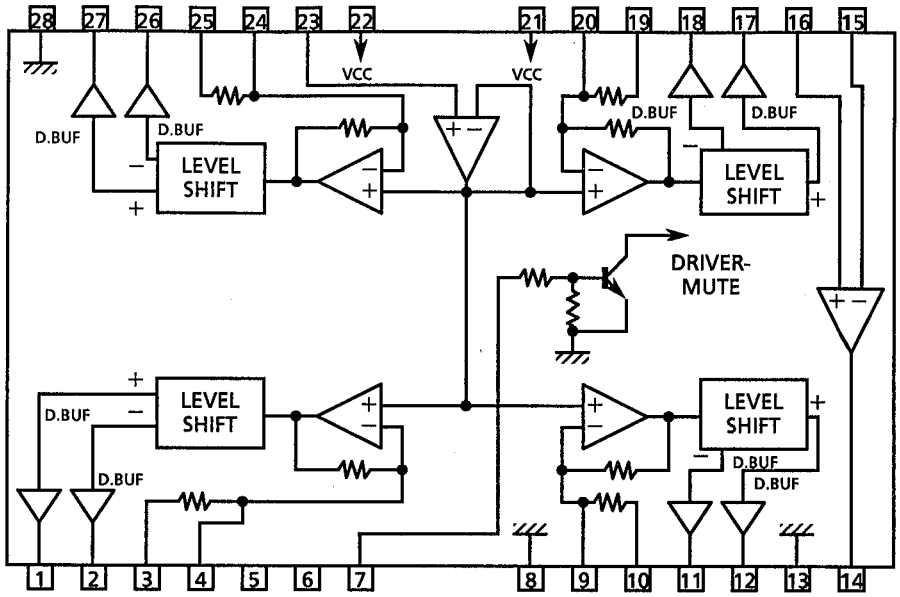

3.Description

Pin No.	Symbol	I/O	Description
1 2	CH1-OUT A CH1-OUT B	O	Focus drive output
3	CH1-IN A	—	Non connection
4	CH1-IN B	I	FOD input
5	TR-B	O	Transistor control
6	VREG-OUT	O	Referrence voltage output
7	MUTE	I	Mute signal input pin
9 20	CH2-IN B CH3-IN B	I I	Spindle motor drive input Feed motor drive input
11 12	CH2-OUT B CH2-OUT A	O	Spindle motor drive output
24	CH4-IN B	I	Feed motor drive input

Pin No.	Symbol	I/O	Description
8,13,28	GND	—	GND
10 14 15 16 19 25	CH2-IN A OPOUT OPIN- OPIN+ CH3-IN A CH4-IN A	—	Non connection
17 18	CH3-OUT A CH3-OUT B	O	Feed motor drive output
21,22	Vcc	—	Power supply
23	BIAS IN	I	Input pin of Bias
26 27	CH4-OUT B CH4-OUT A	O	Tracking drive output

■ TA8409F (IC802,IC803) : DC Motor driver

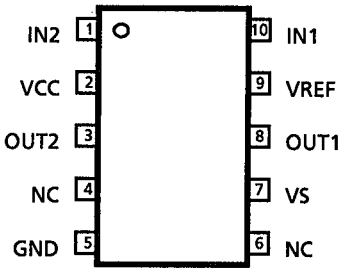

INPUT		OUTPUT		MODE
IN1	IN2	OUT1	OUT2	
0	0	∞	∞	stop
1	0	H	L	open
0	1	L	H	clpose
1	1	L	L	break

∞--High impeadance

■ LC72131 (IC121) : PLL Synthesizer

1. Terminal Layout

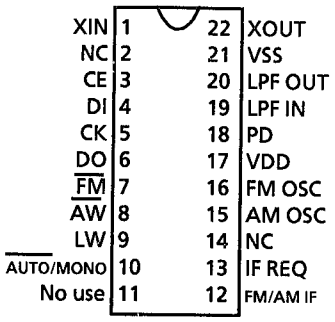

2. Block Diagram

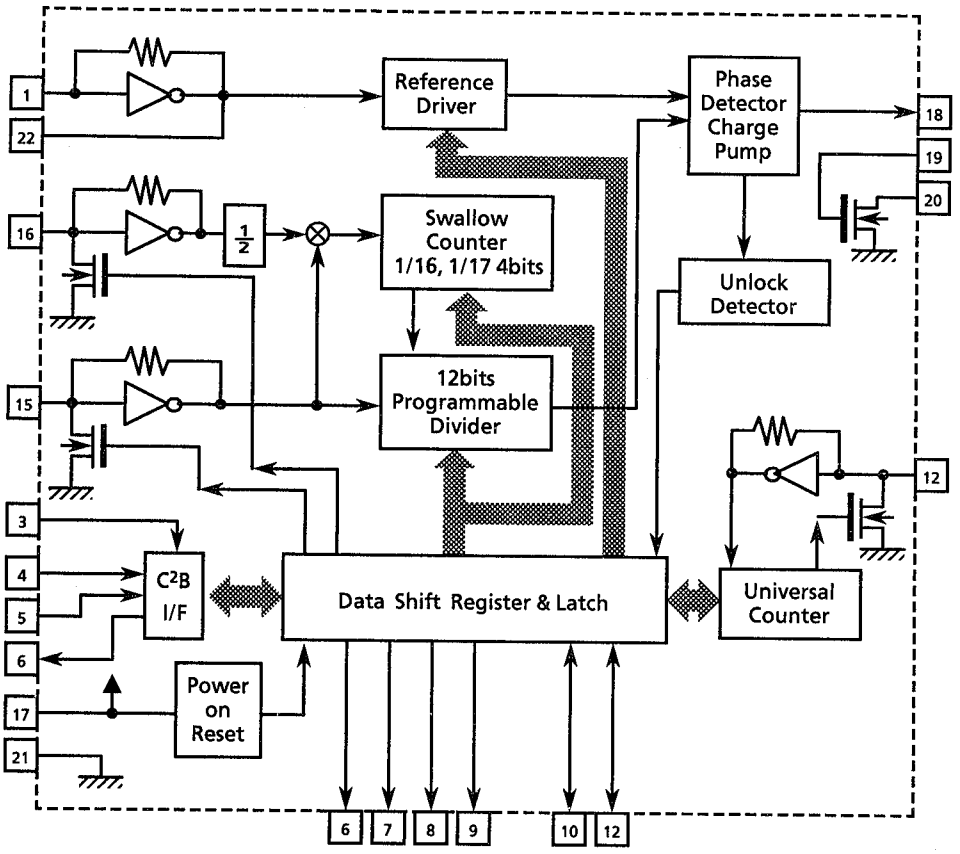

3. Pin Functions

Pin No.	Symbol	I/O	Functions	Pin No.	Symbol	I/O	Functions
1	X in	I	Crystal oscillator (7.2MHz).	12	FM/AM IF	I	Universal counter input
3	CE	I	Fix the chip enable to "H" when inputting (DI) and outputting (DO) the serial data.	13	IF REQ	O	Output the "IF-signal request" to IC102
4	DI	I	Receive the control data from the controller (IC701).	15	AM IN	I	Input the local oscillator signal of AM.
5	CK	I	This clock is used to synchronize data when transmitting the data of DI and DO.	16	FM IN	I	Input the local oscillator signal of FM.
6	DO	O	Transmit the data from LC72131 to the controller which is synchronized with CK.	17	VDD	--	This is a terminal of power supply.
7	$\overline{FM}$	O	It is "L" on FM mode.	18	PD	O	PLL charge pump output : When the local oscillator signal frequency is higher than the reference frequency high level signals will output. When it is lower than the reference frequency, low level signals will output. When it is same as reference frequency signals, it will be floating.
8	MW	O	It is "L" on MW mode.	19	LPF IN	I	Transistor used for the PLL active low-pass filterr
9	LW	O	It is "H" on LW mode.	20	LPF OUT	O	Transistor used for the PLL active low-pass filterr
10	$\overline{AUTO/MONO}$	O	It is "H" on monaural, "L" on auto.	21	VSS	--	Connected to GND
11	NO USE	O		22	X out	O	Crystal oscillator (7.2MHz).

■ LA1836M (IC102) : FM AM IF AMP & detector, FM MPX Decorder

1. Terminal Layout

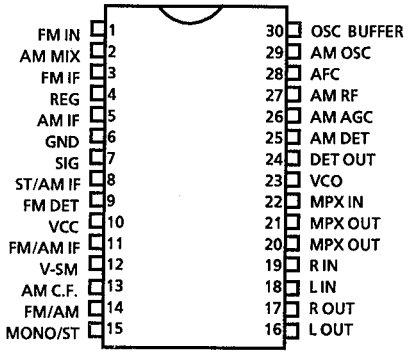

3. Pin Function

Pin No.	Symbol	I/O	Function
1	FM IN	I	This is an input terminal of FM IF Signal.
2	AM MIX	O	This is an output terminal for AM mixer.
3	FM IF	I	Bypass of FM IF
4	REG	—	Register value between pin4 and pin28 desides the frequency width of the input signal.
5	AM IF	I	Input of AM IF Signal.
6	GND	—	This is the device ground terminal.
7	SIG	O	When the set is tunning, this terminal becomes "L".
8	ST/AM IF	O	Stereo indicator output. Stereo : "L", Mono : "H"
9	FM DET	—	FM detect transformer.
10	VCC	—	This is the power supply terminal.
11	FM/AM IF //MUTE	O/I	When the signal of IF REQ of IC121(LC7218) appear, the signal of FM/AM IF output. //Muting control input.
12	VSM	O	S Meter output and adjust AM SD sensitivity.
13	AM C.F.	O	This is a terminal of AM ceramic filter.
14	FM/AM	I	Change over the FM / AM input. "H" : FM, "L" : AM
15	MONO/ST	O	Stereo : "H", Mono : "L"
16	L OUT	O	Left channel signal output.
17	R OUT	O	Right channel signal output
18	L IN	I	Input terminal of the Left channel post AMP.
19	R IN	I	Input terminal of the Right channel post AMP.
20	MPX L OUT	O	Mpx Left channel signal output.
21	MPX R OUT	O	Mpx Right channel signal output.
22	MPX IN	I	Mpx input terminal.
23	VCO	I	Voltage controlled oscillator terminal.
24	DET OUT	O	AM/FM detection output.
25	AM DET	—	AM low cut adjustment.
26	AM AGC	I	This is an AGC voltage input terminal for AM.
27	AM RF	I	This is an input terminal for AM RF signal.
28	AFC	—	This is an output terminal of voltage for FM-AFC.
29	AM OSC	—	This is a terminal of AM Local oscillation circuit.
30	OSC BUFFER	O	AM Local oscillation Signal output.

2. Block Diagram

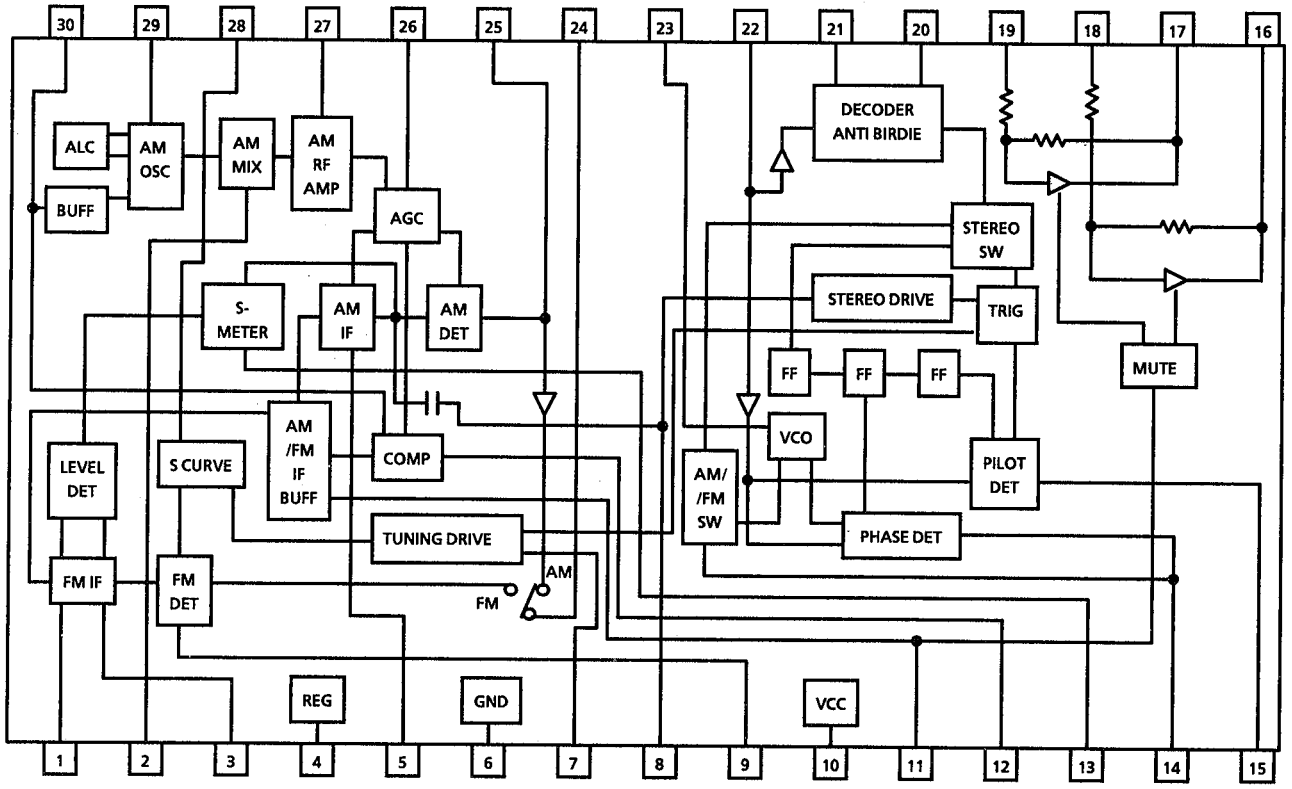

■ CL480(IC101) : MPEG decoder

1. Functions

CL480 is MPEG-1 Audio / Video decoder

2. Terminal Layout

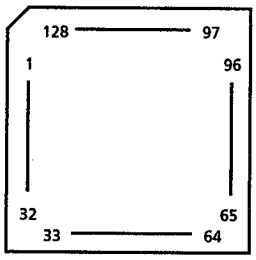

3. Block Diagram

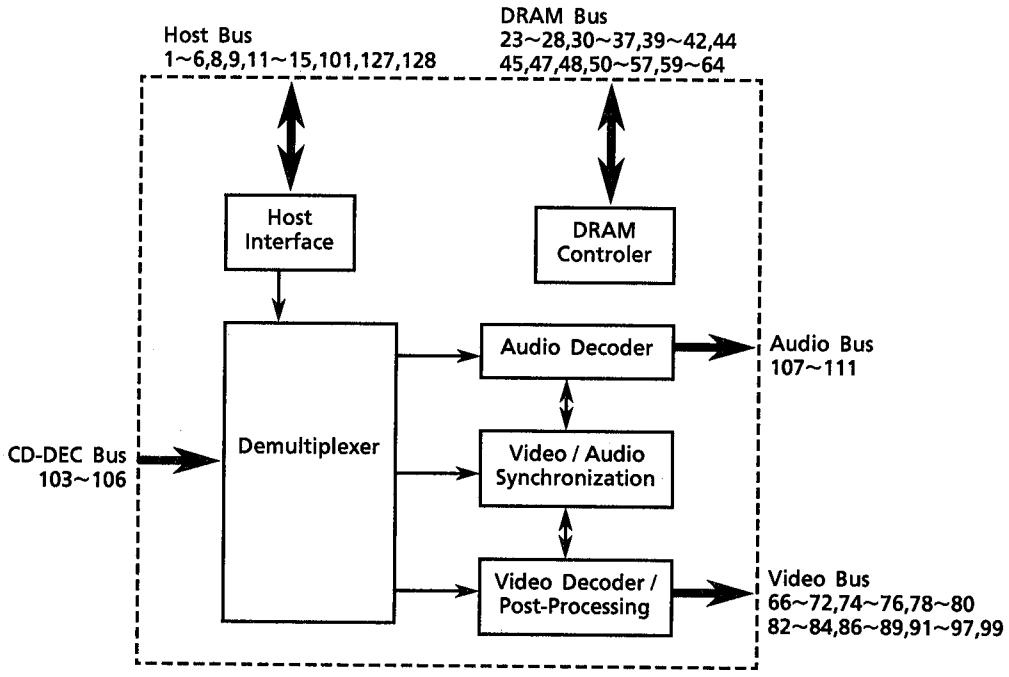

4. Terminal Discription

Pin No.	symbol	I/O	Function	Pin No.	symbol	I/O	Function
1	HA2	I	Host address terminal	78~80	VD10~ VD12	O	Video data terminal (G2~4/Y2~4)
2	DS	I	Data strobe terminal	81	IO VDD	--	Power suplly for Input /Output
3	W/R	I	I/O read terminal	82~84	VD13~ VD15	O	Video data terminal (G5~7 / Y5~7)
4	IRQ	O	Interact terminal	85	CKT VSS	--	Connected to GND
5	DTACK	O	Acknowledge data output	86~89	VD16~ VD19	O	Video data terminal (B0~B3)
6	HD0	I/O	Host data terminal	90	IO VSS	--	Ground terminal for Input /Output
7	IO VDD	--	Power suplly for Input /Output	91~94	VD20~ VD23	O	Video data terminal (B4~7)
8,9	HD1,2	I/O	Host data terminal	95	VSYNC	I/O	Vertical comparator / Composite comparator output
10	CKT VSS	--	Connected to GND	96	HSYNC	I/O	Horizontally synchronizing signal
11~15	HD3~HD7	I/O	Host data terminal	97	VOE	I	Video output enable signal
16	IO VSS	--	Ground terminal for Input /Output	98	VCO VDD	--	Power suplly of VCO
17	TEST	I	Test terminal	99	VCLK	I/O	Video clock terminal
18	XTL VSS	--	Oscillator grand terminal	100	VCO VSS	--	Ground of VCO
19	XTLIN	I	Oscillator input terminal	101	RESET	I	Reset signal input
20	XTLOUT	O	Oscillator output terminal	102	IO VSS	--	Ground terminal for input/output
21	XTL VDD	--	Power suplly for Oscillator	103	C2PO	I	Data error flag input
22	CKT VDD	--	Power suplly	104	CDLRCK	I	L / R word clock input
23~28	MD0~ MD5	I/O	DRAM data / ROM data terminal	105	CDDATA	I	Bit serial data input
29	IO VDD	--	Power suplly for Input /Output	106	CDBCK	I	Bit clock output
30,31	MD6,7	I/O	DRAM data / ROM data terminal	107	DALRCK	O	L / R clock output
32,33	MCE0,1	O	Chip enable output for ROM bank	108	DADATA	O	Bit serial PCM audio signal output
34~37	MD8~ MD11	I/O	DRAM data / ROM data terminal	109	DABCK	O	Bit clock output
38	IO VSS	--	Ground terminal for Input /Output	110	IO VDD	--	Power suplly for input/output
39~42	MD12~ MD15	I/O	DRAM data / ROM address terminal	111	XCK	I	Bit clock input terminal from outside
43	5V VDD	--	Power suplly (+5V)	112	CKT VDD	--	Power suplly
44	LCAS	O	DRAM LCAS/ROM address terminal	113	PIO12	O	Interact 2 signal output
45	LCASIN	I	DRAM LCAS input	114	PIO11	O	Non connection
46	CKT VSS	--	GND	115	PIO10	I	Host enable signal input
47	MWE	O	DRAM write enable signal output	116	PIO9	I	Boot rom enable signal input
48	UCAS	O	DRAM UCAS/ROM address terminal	117	PIO8	O	Non conection
49	IO VDD	--	Power suplly for input/output	118	PIO7	O	DAC emphasis signal output
50	UCAS IN		DRAM UCAS input terminal	119	PIO6	I	CD-DA emphasis signal input
51,52	RAS0,1	O	DRAM RAS0,1 terminal	120	PIO5	O	Non connection
53~57	MA9~ MA5	O	DRAM data / ROM address terminal	121	PIO4	O	FMV detect signal output
58	IO VSS	--	Ground terminal for Input /Output	122	PIO3	O	CD-DA Video CD select signal output Low : Video CD
59~63	MA4~ MA0	O	DRAM data / ROM address terminal	123	5V VDD	--	Power suplly (+5V)
64	PIO0	O	ROM address extention terminal	124	PIO2	O	Non conection
65	IO VDD	--	Power suplly for Input /Output	125	IO VSS	--	Ground for input/output
66~72	VD0~ VD6	O	Video data terminal (R0~6/CrCb0~6/YCrCb0~6)	126	PIO1	O	Non connection
73	IO VSS	--	Ground terminal for Input /Output	127	HA0	I	Host address input
74~76	VD7~VD9	O	Video data terminal (R7/CrCb7/YCrCb7)(G0,1/Y0,1)	128	HA1	I	Host address input
77	CKT VDD	--	Power suplly				

■ BU1417K(IC104) : DIGITAL RGB ENCODER

1.Pin layout

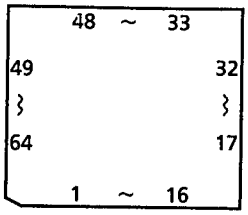

2. Description

Pin No.	symbol	I/O	Description	Pin No.	symbol	I/O	Description
1	BOSD	I	OSD data input	33	SLABEB	--	Not used
2	GD0	I	G data input	34	ADDH	--	Not used
3	GD1	I	G data input	35	VREF	--	Reference voltage
4	GD2	I	G data input	36	CGND	--	GND
5	GD3	I	G data input	37	COUT	O	クロマ出力端子
6	GD4	I	G data input	38	VGND	--	GND
7	GD5	I	G data input	39	VOUT	O	コンポジット出力端子
8	GD6	I	G data input	40	AVSS	--	GND
9	GND	--	GND	41	NC	--	Not used
10	GD7	I	G data input	42	IR	I	DACの出力振幅を設定
11	BD0	I	B data input	43	AVDD	--	Power suplly
12	BD1	I	B data input	44	YGND	--	GND
13	BD2	I	B data input	45	YOUT	O	ルミナンス出力端子
14	BD3	I	B data input	46	G4FSC	--	Not used
15	OSDSW	I	Seu up the color input	47	GCLK	--	Not used
16	CDGSWB	I	Video CD/CD-G select signal input	48	YCOFF	--	GND
17	BD4	I	B data input	49	YFILON	--	GND
18	BD5	I	B data input	50	PALL60B	I	NTSC/PAL select signal input
19	BD6	I	B data input	51	VCLK	I	Clock signal input
20	BD7	I	B data input	52	RSTB	I	Reset signal input
21	GND	--	GND	53	CLKSW	I	
22	NTB	--	Not used	54	RD0	I	R data input
23	IM0	I	Select input mode	55	RD1	I	R data input
24	IM1	I	Select input mode	56	RD2	I	R data input
25	TEST1	I	Connected to GND	57	ROSD	I	OSD data input
26	TEST2	I	Connected to GND	58	RD3	I	R data input
27	CVSY	I	Vertical syncro signal input	59	RD4	I	R data input
28	HSY	I	Horizontal syncro signal input	60	RD5	I	R data input
29	PIXCLK	--	Not used	61	VDD	--	Power suplly
30	BLKB	I	Data output possibie	62	RD6	I	R data input
31	VDD	--	Power suplly	63	RD7	I	R data input
32	INT	--	Not used	64	GOSD	I	OSD data input

■ BU2173F(IC105): VCO

1.Pin layout

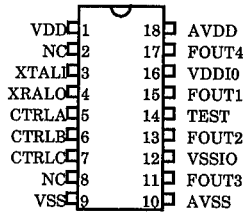

2. Description

Pin No.	symbol	I/O	Description	Pin No.	symbol	I/O	Description
1	VDD	--	+5V	10	AVSS	--	GND
2	NC	--	Not used	11	FOUT3	O	Clock signal output3
3	XTALI	--	Osilaltion terminal	12	VSSIO	--	GND
4	XTALO	--	Osilaltion terminal	13	FOUT2	O	Clock signal output2
5	CTRLA	I	Output feqency control	14	TEST	--	GND
6	CTRLB	I	Output feqency control	15	FOUT1	O	Clock signal output1
7	CTRLC	I	Output feqency control	16	VDDIO	--	+5V
8	NC	--	GND	17	FOUT4	O	Clock signal output4
9	VSS	--	GND	18	AVDD	--	+5V

■ μPD6461GS-635(IC106): OSD

1.Pin layout

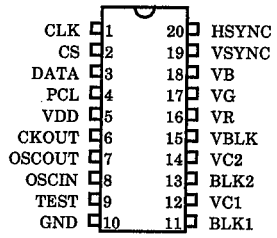

2. Description

Pin No.	symbol	I/O	Description	Pin No.	symbol	I/O	Description
1	CLK	I	Clock signal input	11	BLK1	O	Not used
2	CS	I	LOW時シリアル転送可能	12	VC1	O	Not used
3	DATA	I	Control data input	13	BLK2	O	Not used
4	PCL	I	パワーオン時のクリア用端子	14	VC2	O	Not used
5	VDD	--	+5V	15	VBLK	O	Blanking signal output
6	CKOUT	O	Not used	16	VR	O	Character signal output
7	OSCOUT	O	Not used	17	VG	O	Character signal output
8	OSCIN	I	Dot Clock signal input	18	VB	O	Character signal output
9	TEST	--	GND	19	VSYNC	I	Vertical syncro signal input
10	GND	--	GND	20	HSYNC	I	Horizontal syncro signal input

■ AN8806SB (IC601) : RF & SERVO AMP

1. Terminal Layout

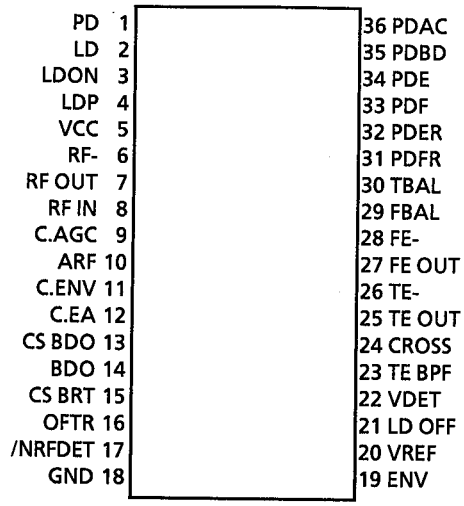

2. Block Diagram

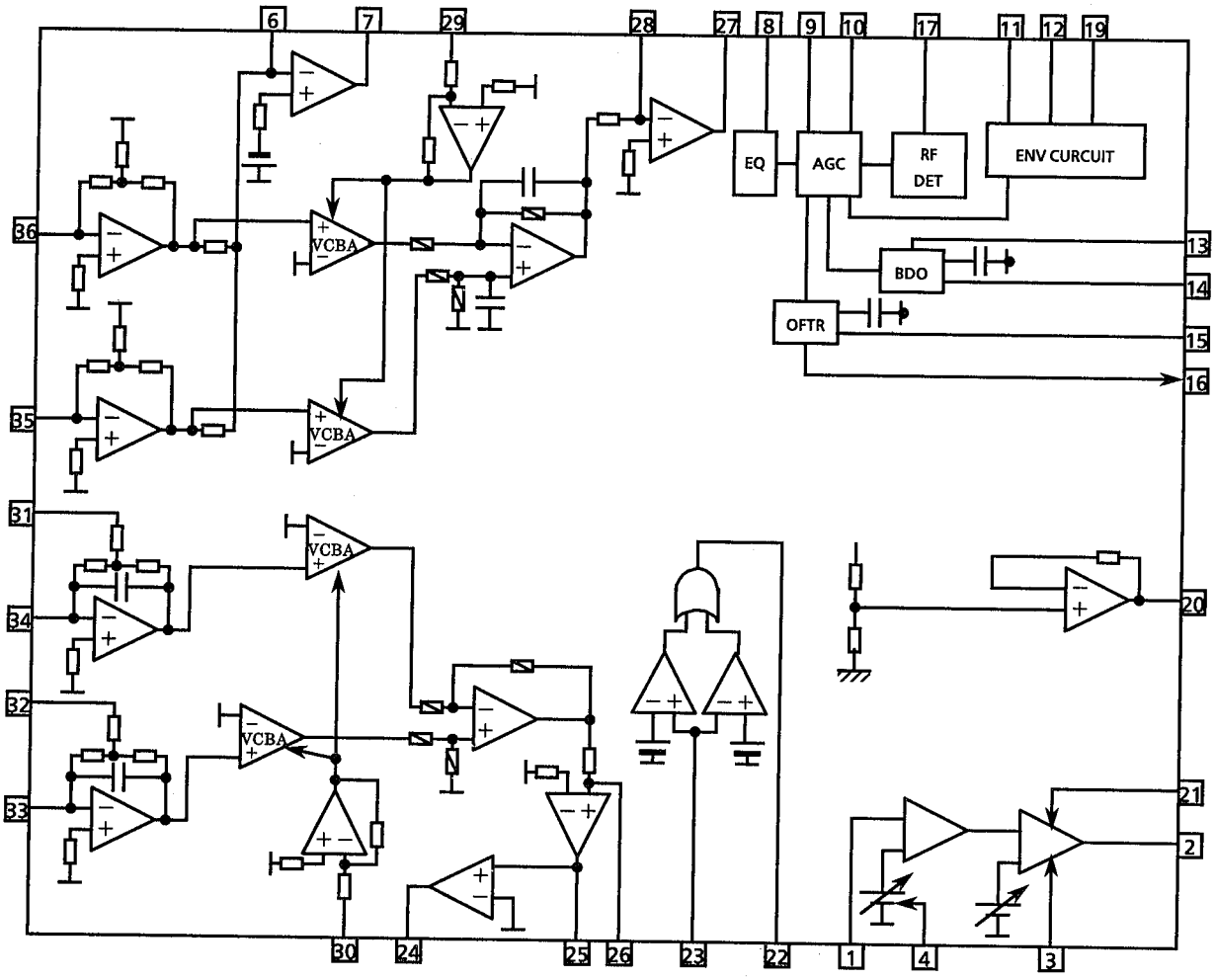

3. Functions

Pin No.	Symbol	I/O	Functions and operations
1	PD	I	APC amp input terminal
2	LD	O	APC amp output terminal
3	LD ON	I	APC ON/OFF control terminal
4	LDP	--	Connected to ground
5	VCC	--	Power supply
6	RF-	I	Inverse input pin for RF amp
7	RF OUT	O	RF amp output
8	RF IN	I	RF input
9	C.AGC	I/O	Connecting pin of AGC loop filter
10	ARF	O	RF output
11	C.ENV	I/O	A capacitor is connected to this terminal to detect the envelope of RF signal
12	C.EA	I/O	A capacitor is connected to this terminal to detect the envelope of RF signal
13	CS BDO	I/O	A capacitor is connected to detect the lower envelope of the RF signal
14	BDO	O	BDO output pin
15	CS BRT	I/O	A capacitor is connected to detect the lower envelope of the RF signal
16	OFTR	O	Of-track status signal output
17	/NRFDET	O	RF detection signal output
18	GND	--	Ground
19	ENV	O	Envelope output
20	VREF	O	Reference voltage output
21	LD OFF	--	Connect to ground
22	VDET	O	Vibration detection signal output
23	TE BPF	I	Input pin of tracking error through BPF
24	CROSS	O	Tracking error cross output
25	TE OUT	O	Tracking error signal output
26	TE-	I	Inverse input pin for tracking error amp
27	FE OUT	O	Output pin of focus error
28	FE-	I	Inverse input pin for focus error amp
29	FBAL	I	Focus balance control
30	TBAL	I	Tracking balance control
31	PDFR	--	Non connection
32	PDER	--	Non connection
33	PDF	I	I-V amp input
34	PDE	I	I-V amp input
35	PD BD	I	I-V amp input
36	PD AC	I	I-V amp input

Internal Connections of FL Display

■ ELU0001-206 : (FL701)

1. Grid Layout

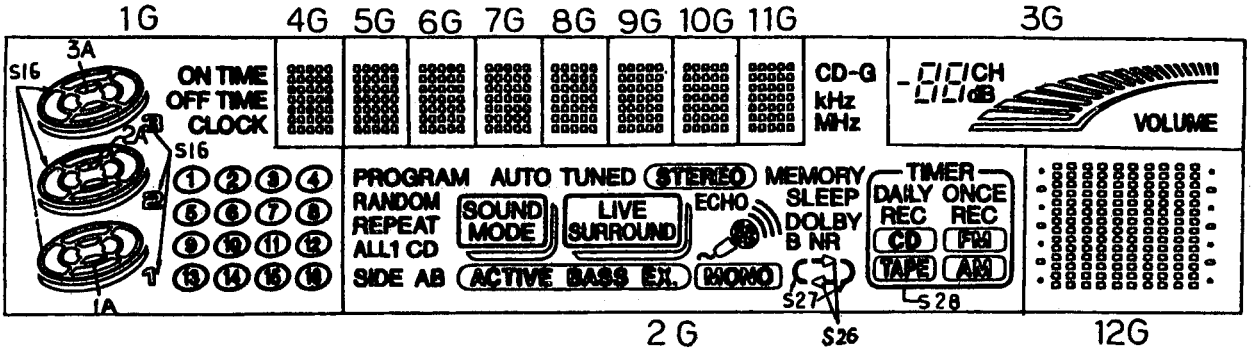

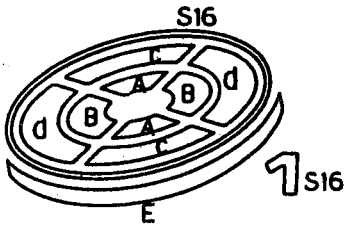

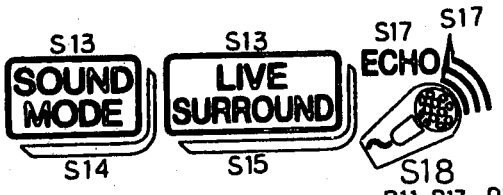

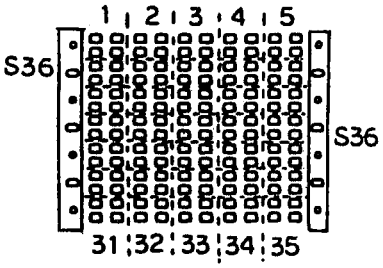

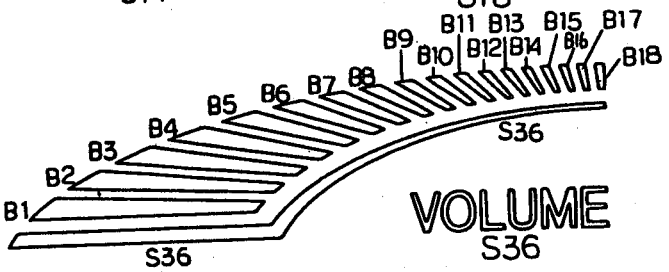

2. Pin Connections

PIN NUMBER	1	2	3	4	5	6	7	8	9	10	11	12	13	14	15	16	17	18	19	20	21	22	23	24
ELECTRODE	F 1	F 1.	F 1	NP	P S1	P S2	P S3	P S4	P S5	P S6	P S7	P S8	P S9	P S10	P S11	P S12	NP	NP	NP	NP	NP	NP	1 G	2 G

PIN NUMBER	25	26	27	28	29	30	31	32	33	34	35	36	37	38	39	40	41	42	43	44	45	46	47	48
ELECTRODE	3 G	4 G	5 G	6 G	7 G	8 G	9 G	10 G	11 G	12 G	P S13	P S14	P S15	P S16	P S17	P S18	P S19	P S20	P S21	P S22	P S23	P S24	P S25	P S26

PIN NUMBER	49	50	51	52	53	54	55	56	57	58	59	60	61	62
ELECTRODE	P S27	P S28	P S29	P S30	P S31	P S32	P S33	P S34	P S35	P S36	NP	F 2	F 2	F 2

Note F : Filament,G : Grid, P : Element, NP : No Pin,
NC : No Connection

(3) Anode Designation

	1G	2G	3G	4G~11G	12G
S1	3A	REPEAT	3g	1	1
S2	3B	ALL	2a	2	2
S3	3C	1	2b	3	3
S4	3D	CD	2f	4	4
S5	3E	PROGRAM	2g	5	5
S6	2A	RANDOM	2e	6	6
S7	2B	SIDE	2c	7	7
S8	2C	A	2d	8	8
S9	2D	B	1a	9	9
S10	2E	AUTO	1b	10	10
S11	1A	TUNED	1f	11	11
S12	1B	STEREO	1g	12	12
S13	1C	S13	1e	13	13
S14	1D	(SOUND MODE)	1c	14	14
S15	1E	(LIVE SURROUND)	1d	15	15
S16	S16	ACTIVE BASS EX.	CH	16	16
S17	ON TIME	ECHO)))	dB	17	17
S18	OFF TIME	S18	B1	18	18
S19	CLOCK	MONO	B2	19	19
S20		CD-G	B3	20	20
S21	①	KHz	B4	21	21
S22	②	MHz	B5	22	22
S23	③	MEMORY	B6	23	23
S24	④	SLEEP	B7	24	24
S25	⑤	DOLBY B NR	B8	25	25
S26	⑥	=	B9	26	26
S27	⑦	( )	B10	27	27
S28	⑧	TIMER枠含む	B11	28	28
S29	⑨	DAILY	B12	29	29
S30	⑩	REC (DAILY)	B13	30	30
S31	⑪	ONCE	B14	31	31
S32	⑫	REC (ONCE)	B15	32	32
S33	⑬	CD	B16	33	33
S34	⑭	TAPE	B17	34	34
S35	⑮	FM	B18	35	35
S36	⑯	AM	S36		S36

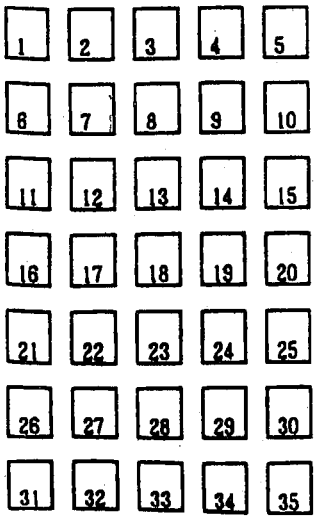

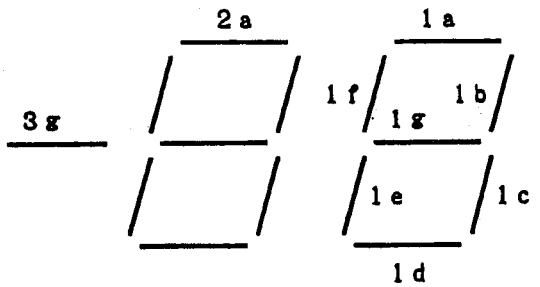

Disassembly Procedures

(1) Top cover and heatsink cover removal
1. Remove 6 screws Ⓐon the rear side and 2 screws Ⓐ on both sides of the cover.
2. Remove the 2screws Ⓑ holding the heatshink cover
3. Remove the top cover and heatsink cover.

(2) Rear panel removal
1. Remove the top cover.
2. Remove the 2screws Ⓒ holding the CD changer mech. ass'y.
3. Remove the 14 screws Ⓑ.
4. Remove the rear panel.

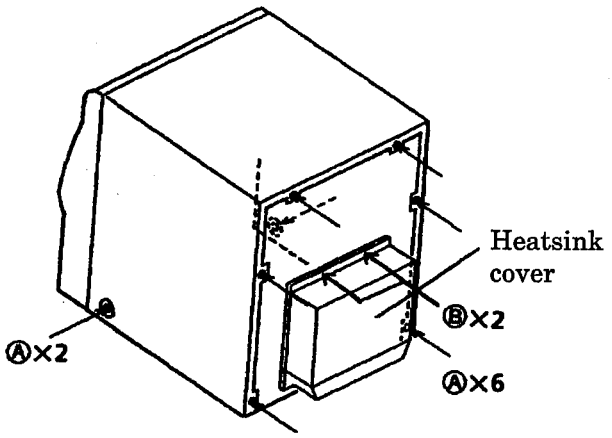

Fig1

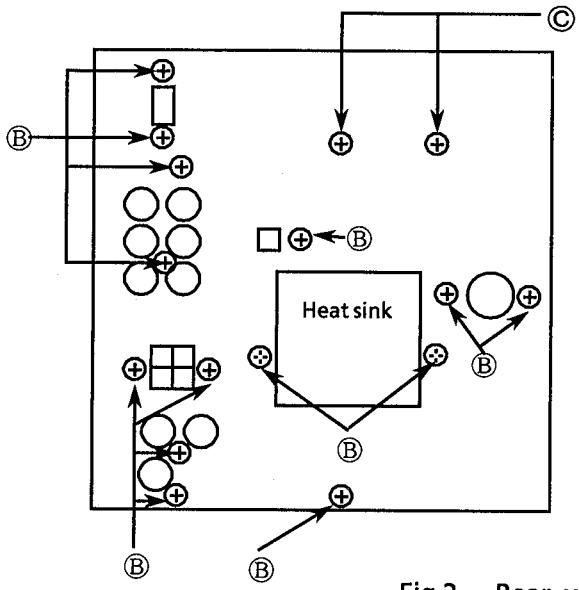

Fig 2 Rear view

(3) CD changer mech. removal
1. Remove the rear panel.
2. Diconnect the CN603,CN604,CN801.
3. Remove the 2 screws Ⓓ holding the CD changer mech..
4. Remove the CD changer mech. ass'y.

(4) Tuner & Audio PCB (ENC-127-1) removal
1. Remove the CD changer mech. ass'y.
2. Remove the plastics rivet and Remove the FMC-002-4 .
3. Disconnect CN401(Flat wire) , CN514.
4. Disconnect CN513 and CN514.
5. Remove the Tuner & Audio PCB (ENC-127-1).

[Note]
Changer mech.ass'y needed connect the main PCB When servicing , so that the set can be movement.

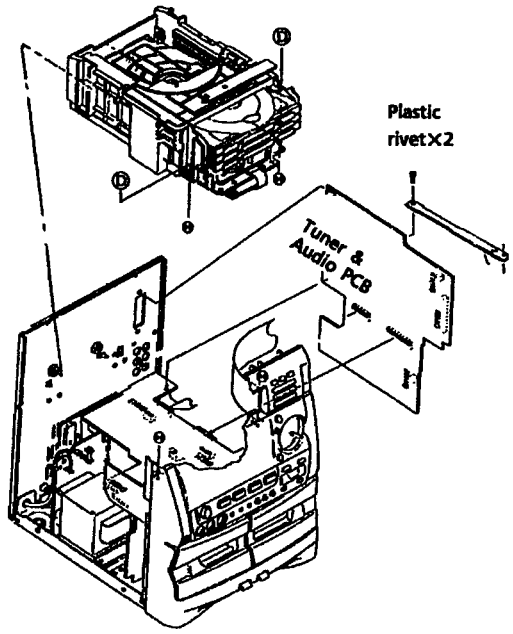

Fig 3 Front view

Ⓐ .. SDSG3006M Ⓑ .... E73273-003 Ⓒ ... SBSF3008Z Ⓓ ... SBSG3008Z

(5) Deck & CD control PCB (FNH-271-1) removal
1. Remove the (1)(2)(3)(4).
2. Disconnect the CN901.
3. Remove the 3 screws Ⓔ holding the PCB and Remove the plastics rivet.
4. Raise up the PCB for disconnecting and you can remove the Deck & CD control PCB with the power AMP PCB.

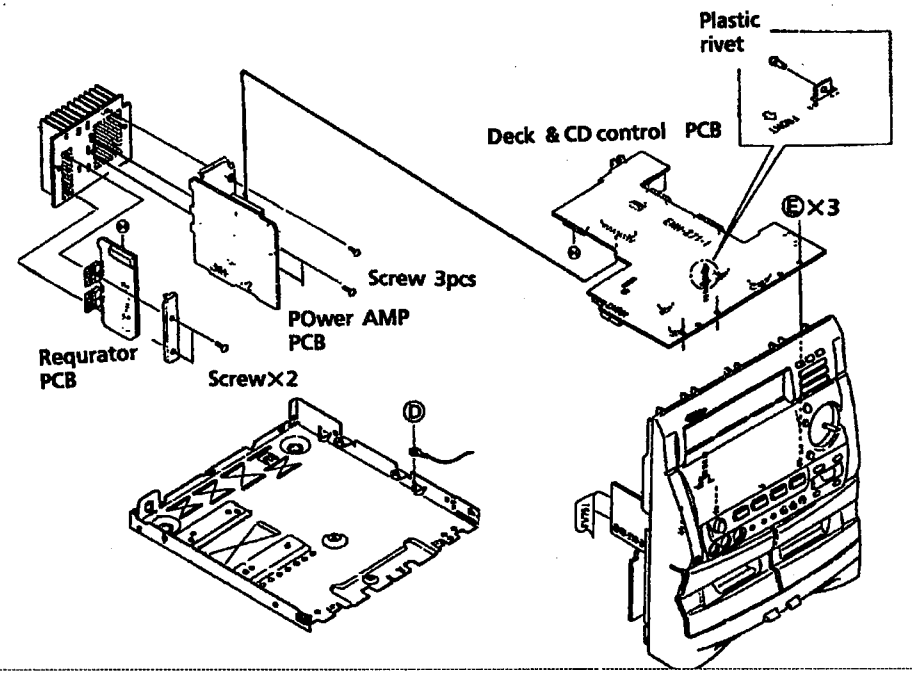

Fig 4

(6) Front PCB (FNH-271-1) removal.
1. Remove the (1)(2)(3)and(4) (5).
2. Remove the 3 Fook of the bottom side and both side and Remove the Front panel ass'y.
3. Remove the 16 screws Ⓕ holding the braket.
4. Remove the Braket and Front PCB.

(7) Switch PCB(FNH-271-2) removal.
1. Remove the (1)(2)(3)and (4)(5)(6).
2. Remove the 7 screws holding the PCB.
3. Remove the Switch PCB with the headphone PCB.

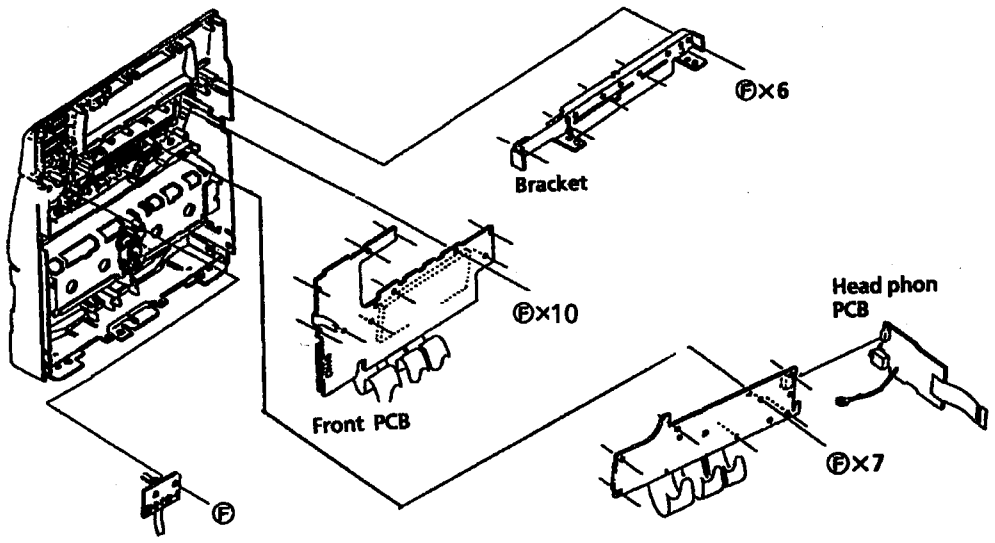

Fig 5

Ⓔ .. SPST2604Z Ⓕ ... SDSF2608Z

(8) Cassette mechanism with the PCB (FMC-002-3) removal
1. Remove the (1)(2)(3)and (4)(5).
2. Remove the 4screws Ⓖ and 4screws Ⓗ.
3. Remove the Cassette mechanism.

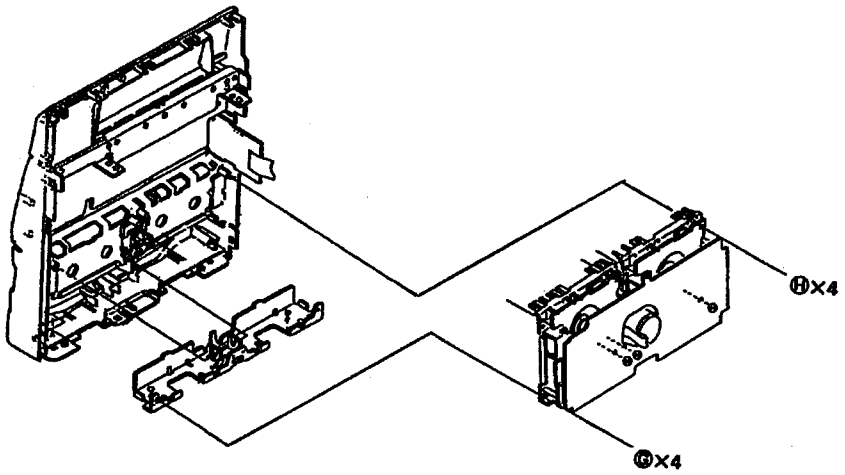

Fig 6

(9) Cassette deck PCB (FMC-002-3) removal
1. Remove the (1),(2),(3)and (4),(5),(8).
2. Disconnect the CN331 and CN332.
3. Remove the 2 screws Ⓓ holding the PCB.
4. Remove the Cassette deck PCB .

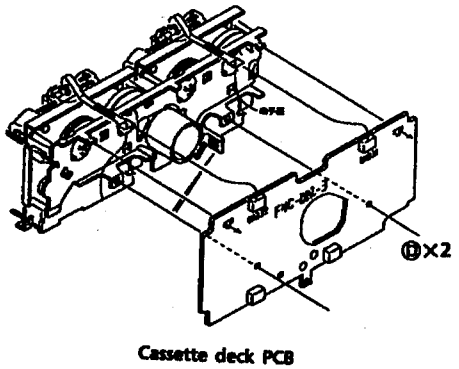

Fig 7

(10) Cassette door lock plate removal
1. Remove the (1)(2)(3)and (4),(5),(8) .
2. Remove the spring.
3. Push up the Elever as shown in the figure below(Fig . 8) and remove the door lock plate.

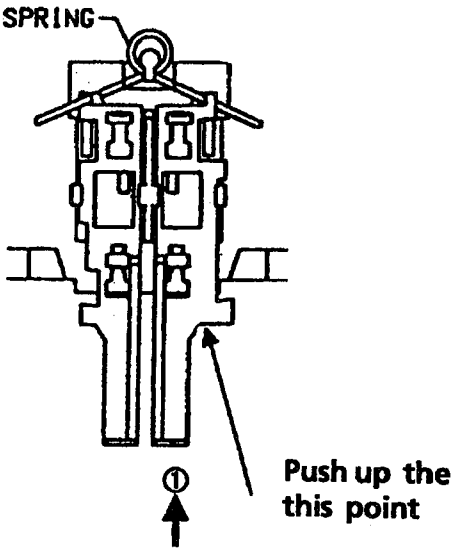

Fig 8

Ⓓ .. SBSG3008Z Ⓖ ... SBST3006Z Ⓗ ... SBSF3008Z

(11) Damper removal
1. Remove the cassette mechanism.
3. Press the tab which secures the damper to remove the damper.(See the arrow shown in the figure below)

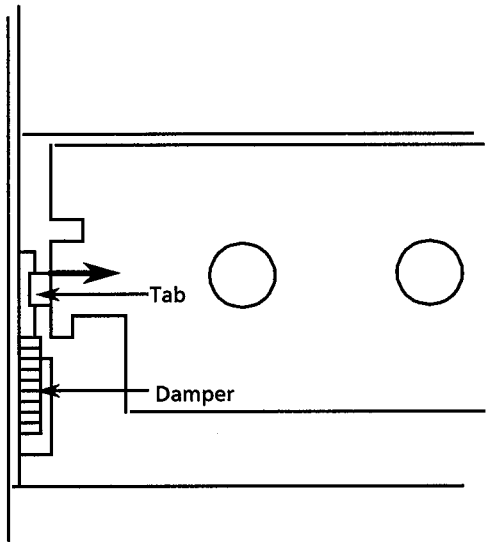

Fig 9

(12) Cassette holder removal
1. Remove the Cassette mechanism assembly.
2. Remove thedamper.
3. Remove the spring holding the cassette holder.
4. Remove the Cassette holder .

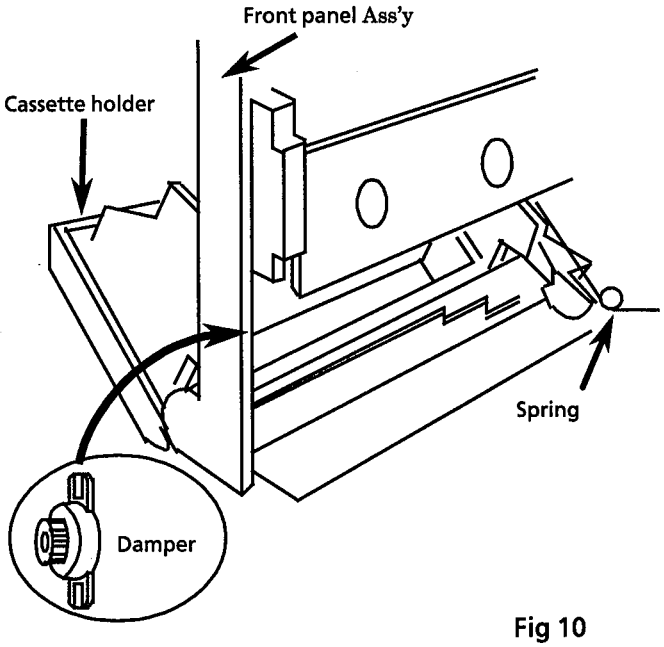

Fig 10

Cassette Mech. Ass'y removal

(13) Head assembly removal
1. Remove the Cassette mech. ass'y .
2. Remove the Flexible wire from the cassette deck and remove the 3 screws Ⓘ holding the head Ass`y.

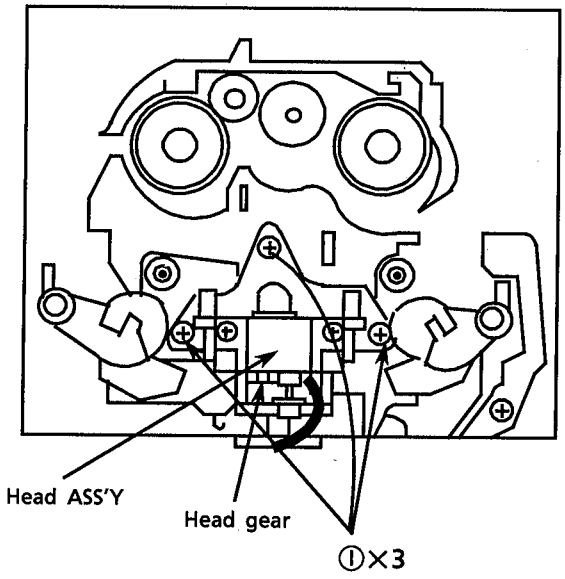

Fig11 Cassettem mech. bottom view

(14) Head assembly
1. The direction of the head is changed with the direction lever .When servicing ,install the direction lever according to the direction of the head assembly .

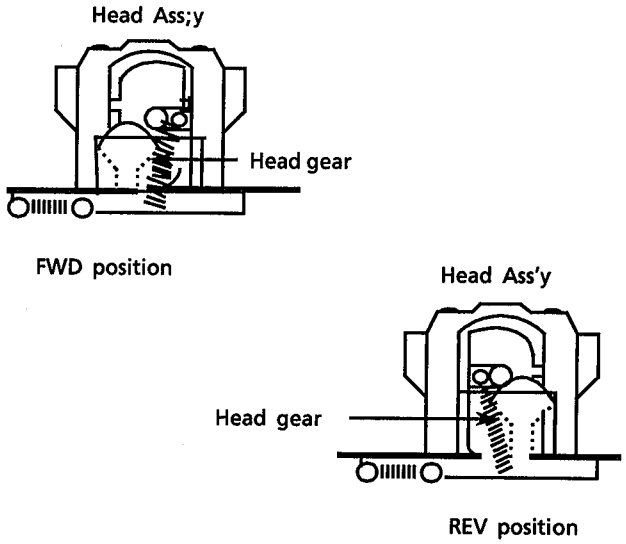

Fig .12-A Head Ass'y side view

(15)Pinch roller(FWD/REV) removal
1. Remove the cassette mech. assembly.
2. Remove the hook holding the pinch roller.
3. Remove the pinch roller ass'y.

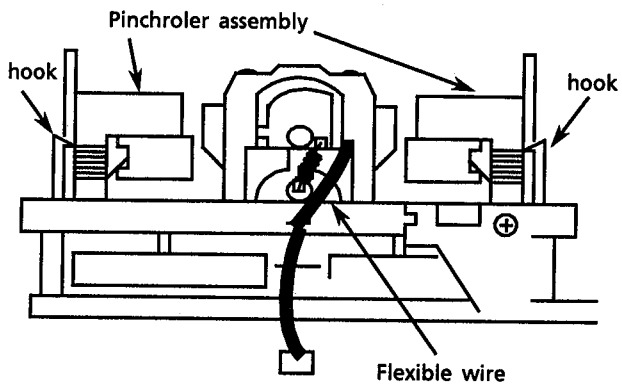

Fig 13 Cassette mechanism bottom view

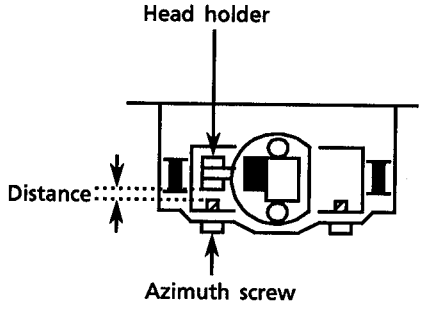

Fig.12-B A distance of between head older and azimuth screw

Ⓘ .. SDSF2608Z

(16) Capstan motor removal.

1. Remove the cassette mechanism.
2. Remove the cassette deck control PCB.
3. Remove the 6 screws Ⓙ holding the bracket.
4. Remove the hooks (■) of the bracket.
5. Put the cutting on the flywheel A together the bracket's pawl as shown in Fig. 16(Flywheel A) and check that the flywheel B is removed from the bracket's pawl(Fig. 16-Flywheel B).
6. Remove the capstan motor with the bracket.
7. Unsolder the broken flat wire of the capstan motor.
8. Remove the 2 screws fixing the motor and the bracket.

* To remove the bracket, it is easier to remove mech."B" first.
Vice versa, assembling mech."A" is easier for reassembly.

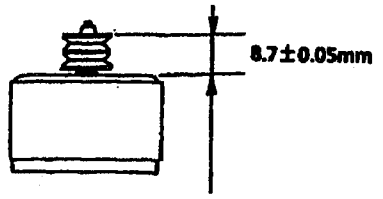

Fig 14 Capstan motor pully installation

(17) Flywheel removal

1. Remove the cassette mechanism assembly.
2. Remove the cassette amp PCB.
3. Remove the 6 screws Ⓙ and the bracket.
4. Remove the 4 hooks of the bracket.
5. Remove the bracket.
6. Remove the flywheels.

*The oil on the capstan must be wiped out after re-assembling.

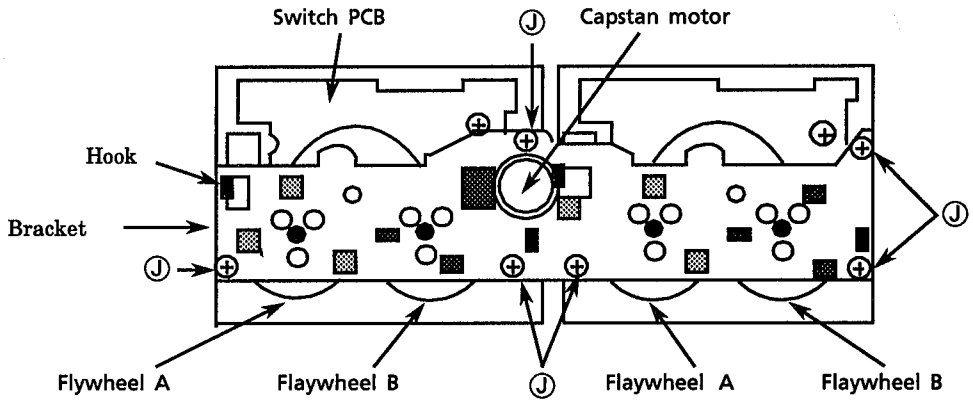

Fig. 15 Cassette mech. bottom view

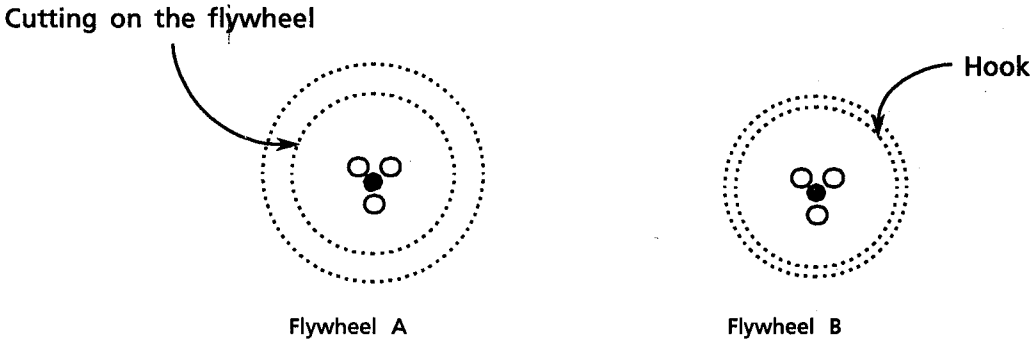

Fig 16 Hook and Cutting on the flywheel

Ⓙ .. SDSF2608Z

(18) How to install the belts

1. Install the flywheels and belts as shown in the figure below. (Fig 17)
   When putting the belts, put the long belt first.
2. Install the main reels to put the belts on the flywheels.

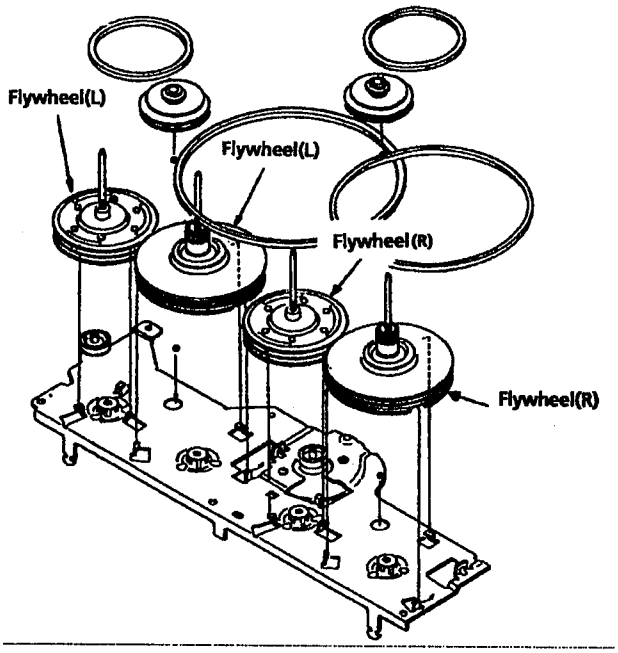

Fig 17-A Install the Braket and flywheels

REEL BELTS

After hooking reel belts, no twist.

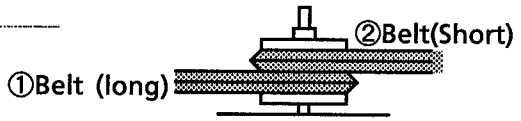

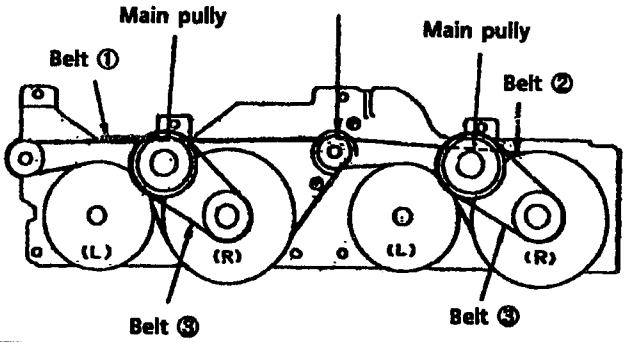

Fig 17-B Install the Belts

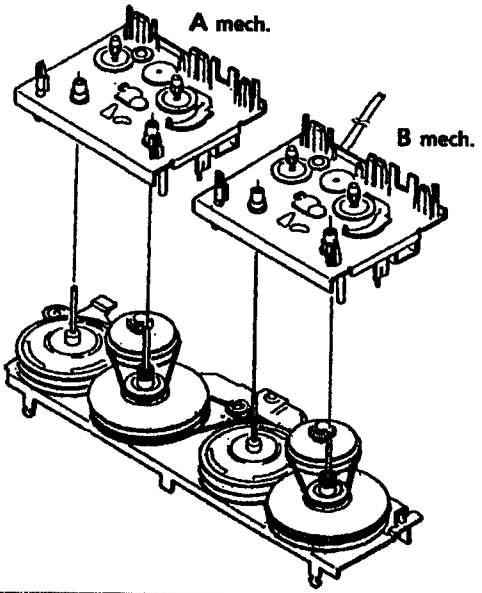

Fig 17-C Insdtall the cassette emch.

(19) Switch PCB removal

1. Remove the flywheel.
2. Remove the 1 screw Ⓚ .
3. Unsolder the broken solenoid.
4. Release the 4 hooks holding the Switch PCB.
5. Remove it.

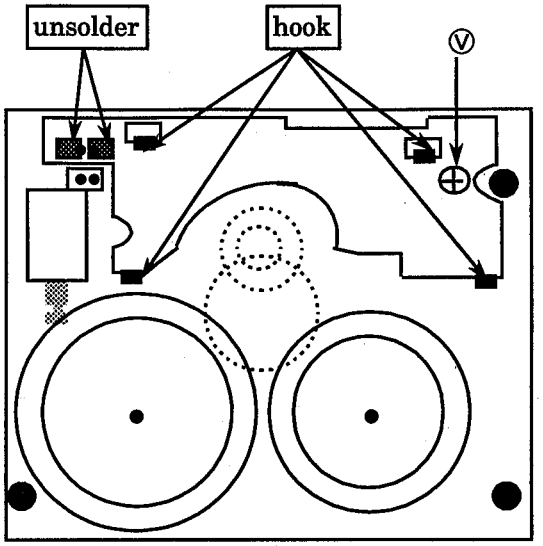

Fig 18 Cassette mech. bottom view

(20) How to install the cassette mechanism

Install the parts as shown in the Fig.19 .

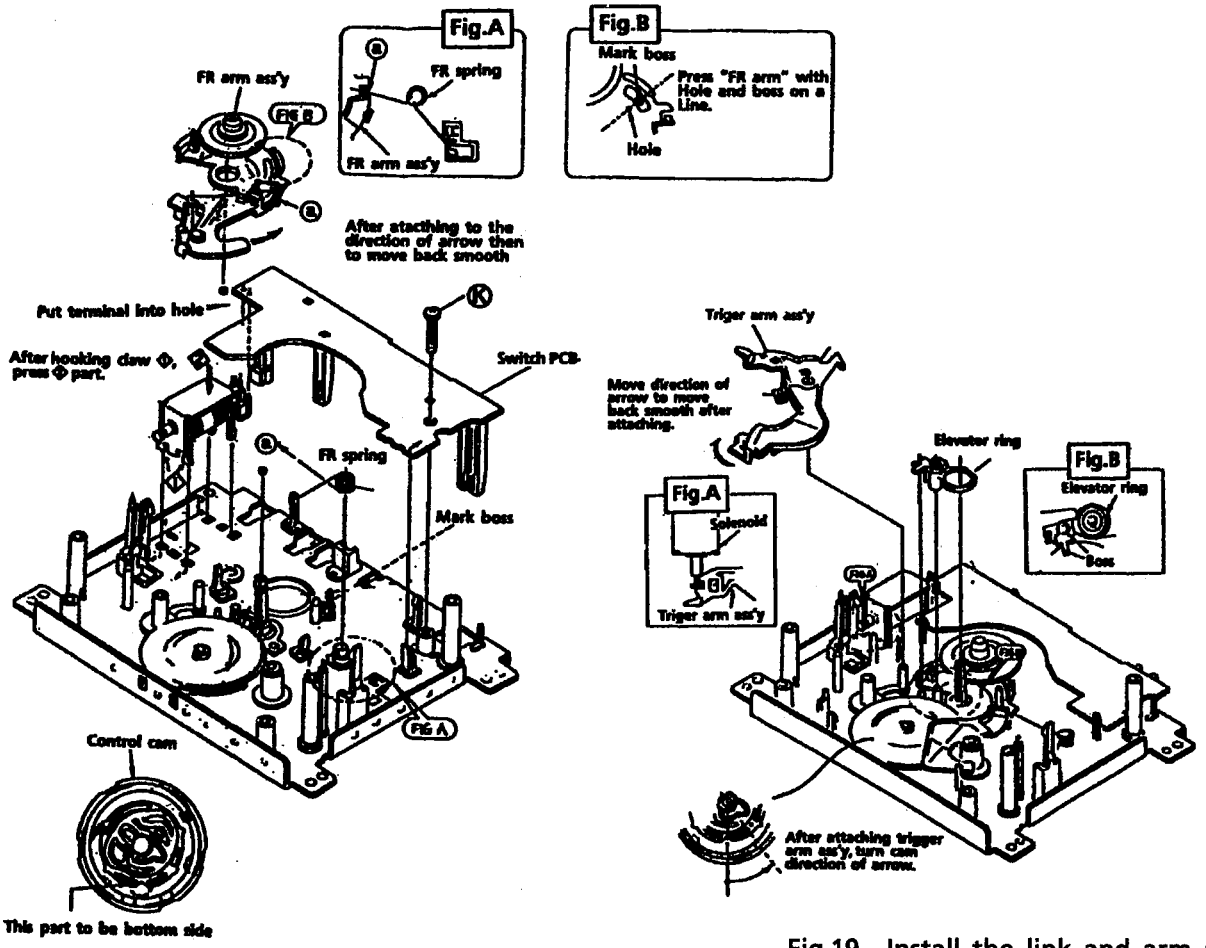

Fig 19 Install the link and arm ass'y

Ⓛ .. E406293-001 Ⓜ ... SDSP2003N

CD changer mech. Ass,y removal

(21) CD Tray assembly removal

1. Disassemble the changer mech..
2. Remove the screw Ⓛ holding the stopper blacket.(See Fig.20) ---- (U.S.A and CANADA only)
3. Remove the rod from both ends' hooks which are secured on T.Bracket ⓐ and clamper baseⓑ. [See Fig. 20)
4. Remove 3 screwsⓁ securing T.Bracket.(See Fig. 22.)
5. Remove a screw Ⓝsecuring center of the clamperass'y. (See Fig. 21)
6. Remove the clamper ass'y from ★ screw fixing side.
7. Remove a screw Ⓛwhich secures the return spring and lock levers from the chassis ass'y.(See Fig. 23.)
8. Remove 2 pawlsⓓ which slightly secure the return spring to remove it.
9. Remove 3 lock levers.
10. Check that the lifter unit stopper is inserted into hole ⓔ located on CD tray ass'y. (See Fig. 24.)
11. Check that the driver unit elevator is seen from a hole (marked ⑤) on left side of the CD changer mech..(See Fig. 25 and 26.)
    [NOTE] Set the elevator in correct position (Fig. 26) by rotating the pulley gear with finger if it is not positioned correctly (Fig. 27.).
12. Rotate the motor pulley clockwise with finger until the lifter unit's stopper is lowered from ⓔhole located on the CD tray ass'y. (See Fig. 27.)
13. And, pull all 3 CD tray assemblies forward until they stop. (See Fig. 25.)
14. Press 2 pawls(f, f') located rear side of the CD tray ass'y according to an arrowⓗ to remove the CD tray ass'y. (See Fig. 28.)
    At first, removing the lowest tray is easier.

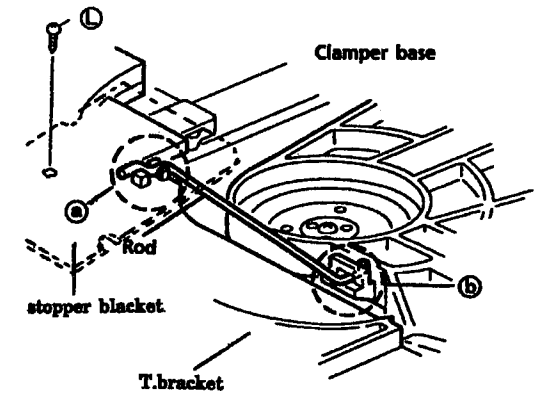

Fig. 20

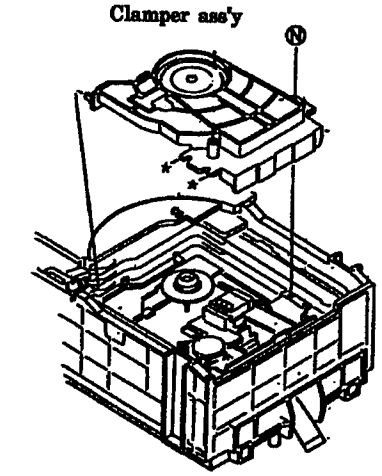

Fig.21

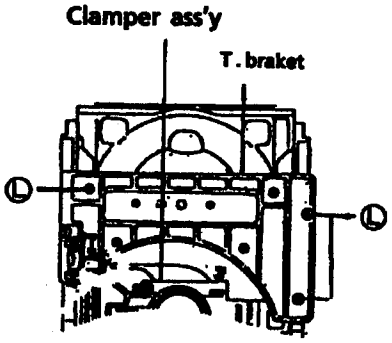

Fig.22

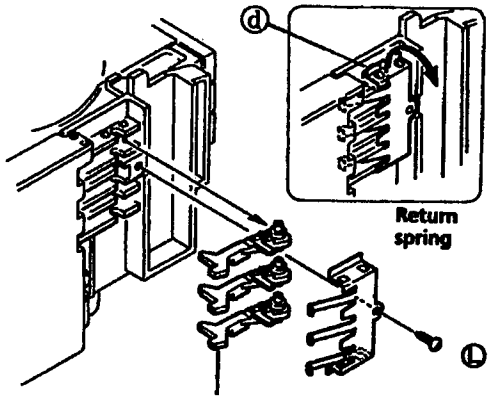

Lock lever

Fig.23

Ⓛ .. SBSF2608Z Ⓝ ... SPST2606Z

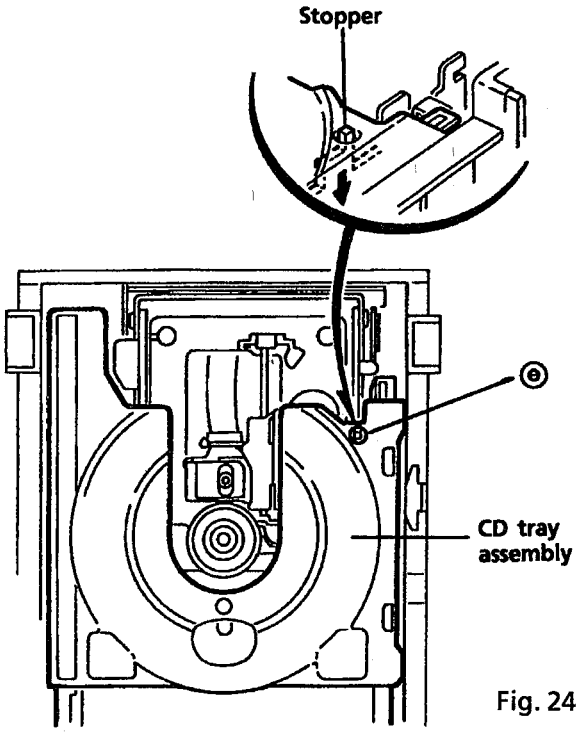

Fig. 24

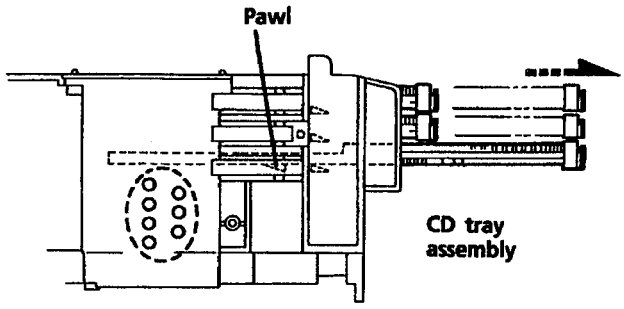

See Fig.26 assembly

Fig. 25

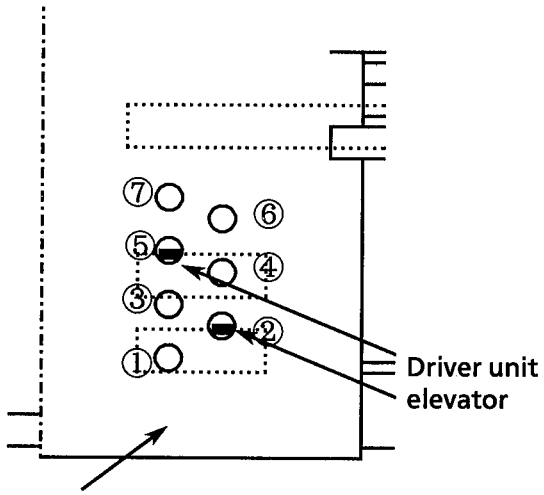

Fig. 26

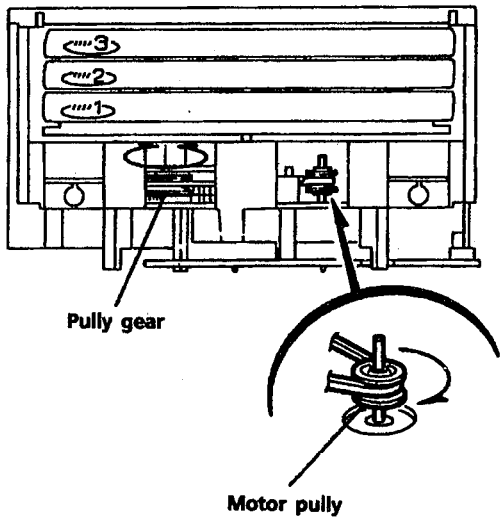

Fig. 27

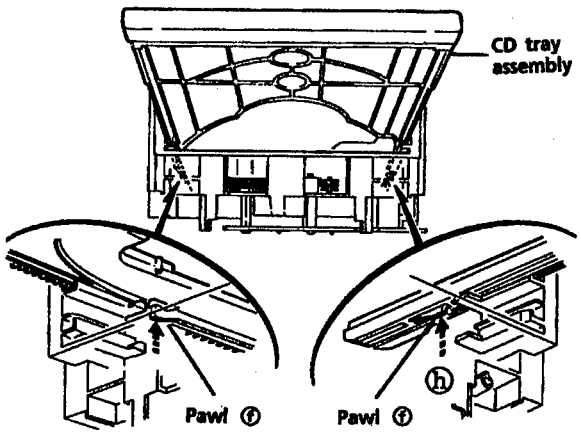

Fig. 28

Ⓛ .. SBSF2608Z

(22) CD mechanism removal

1. Remove the CD tray ass,y .
2. Rotate the Cam R1, R2 ass'y counterclockwise so that CD mech. ass'y's shaft ⓗ is positioned as shown in Fig. 29.
3. Remove 4 screws Ⓛ securing CD mech. ass'y. (See Fig. 29.)

*How to replace pick-up unit

1. If CD mech. is removed without disassembling CD mech. ass'y, rotate the Cam R1, R2 ass'y clockwise to set the CD mech. ass'y's shaft(L) as shown in Fig. 30.
2. Lift the CD mech. ass'y toward the direction ⓘ to remove it from the lifter unit. (See Fig. 31.)

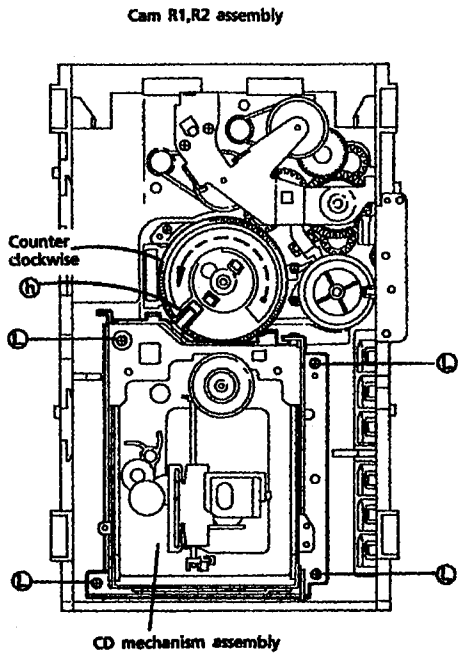

Fig. 29

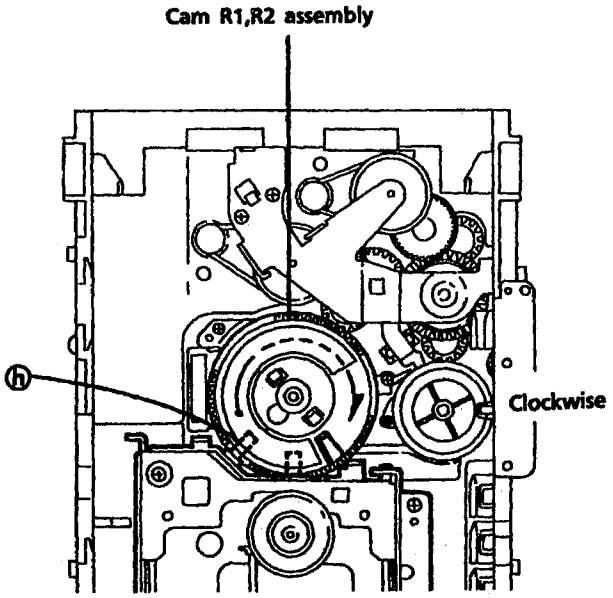

Fig. 30

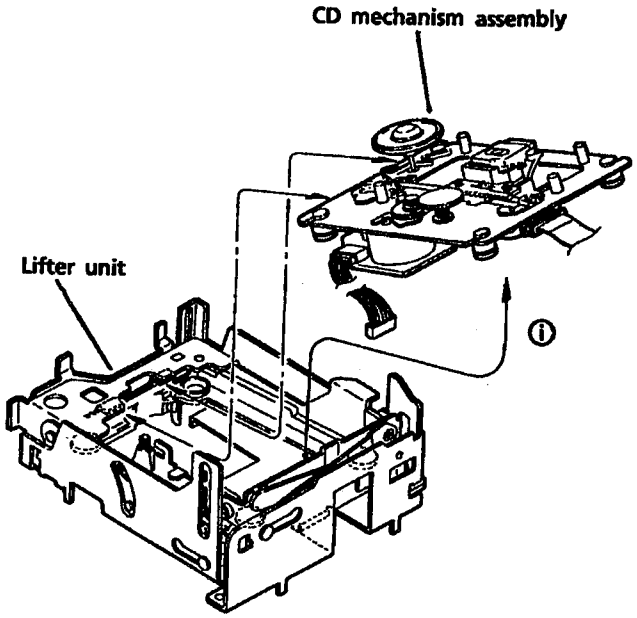

Fig. 31

Ⓛ .. SBSF2608Z

(23) Actuator motor board removal

1. Unsolder 4 soldered point ⓙ for both motors. (See Fig. 32.)
2. Remove a screw Ⓗ securing the CD servo board. (See Fig. 32.)
3. Press the hook and release it to remove the CD servo board.
4. Remove 2 screws Ⓕsecuring the actuator motor board. (See Fig. 32.)
5. Remove 2 screws Ⓛsecuring the tray select switch board. (See Fig. 33.)

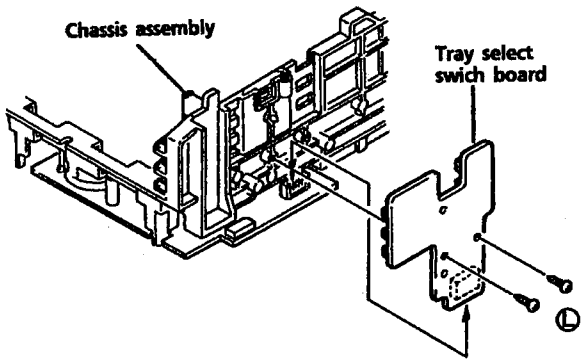

Fig. 33

(24) Cam unit removal

1. Disassemble CD mech. ass'y.
2. Rotate the Cam gear L so that the drive unit's pawl ⓚ is positioned as shown in Fig. 34.
3. Remove the drive unit and cylinder gear. (See Fig.35.)
4. Rotate the Cam gear L so that the select gear's ⓘ is positioned as shown in Fig.36.
5. Remove 4 screws Ⓕ securing the cam unit which includes the cam gear L and Cam R1, R2 ass'y. (See Fig 36.)

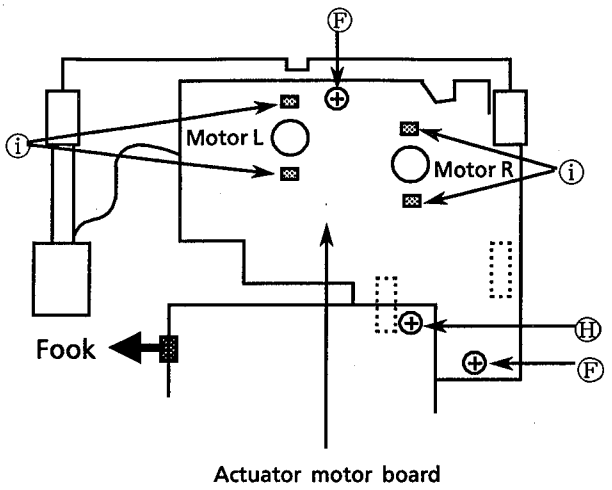

Fig. 32

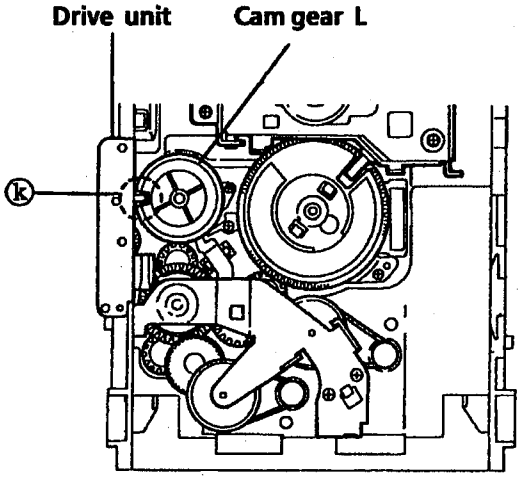

Fig. 34

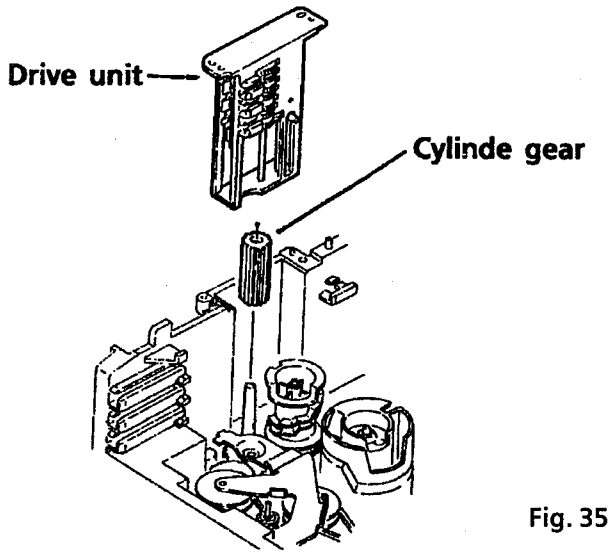

Fig. 35

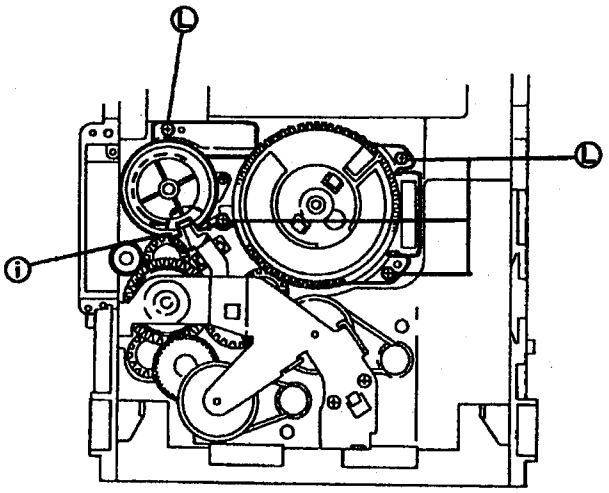

Fig. 36

Ⓕ .. SBSF2608Z Ⓗ ... SBSF3008Z

(25) Removal for actuator motor and belt

1. Remove 2 screws Ⓟ securing the gear bracket. (See Fig. 37.)
2. Press the pawl Ⓜ securing the gear bracket to the arrow in the figure to remove the gear bracket. (See Fig. 37.)
3. Remove the gear bracket from the chassis ass'y's ⓝ securing top of the gear bracket. (See Fig. 38.)
4. Remove each belts from the both actuator motor pulleies and the pulley gears. (See Fig.37.)
5. Reverse the chassis ass'y and widen 4 pawls ⓞ which secure both actuator motors to its arrows to remove the actuator motors. (See Fig.39 .)

[NOTE] The pulley gears and other gears which consist the gear unit may drop separately if the chassis ass'y is reversed without gear bracket and belt. See Fig. 40 to assemble them again.

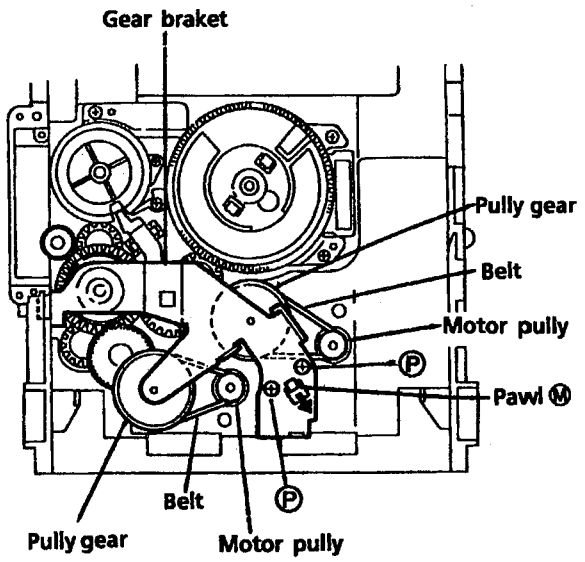

Fig. 37

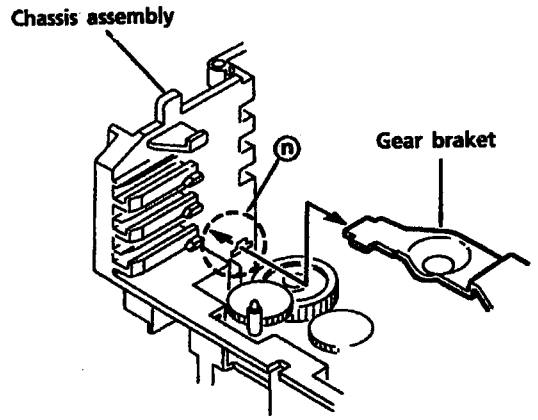

Fig. 38

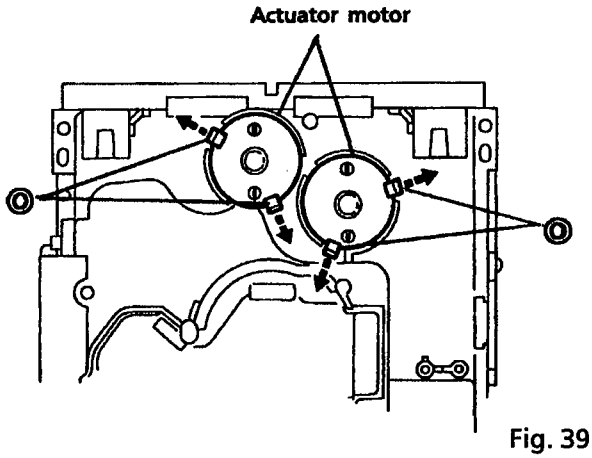

Fig. 39

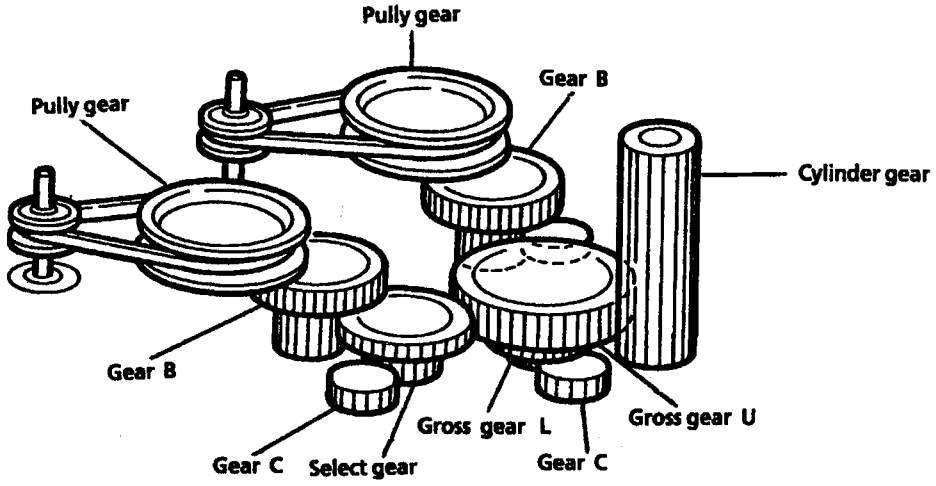

Fig. 40

① .. DPSP2616Z

(26) Removal of cam R1, R2 ass'y and cam gear L

1. Remove the slit washer securing Cam R1, R2 ass'y.
   (See Fig. 41.)
2. Remove 2 pawls Ⓟ securing Cam R1 to remove Cam R2 from Cam R1.
3. Remove the slit washer securing Cam gear L.
4. Remove Cam gear L from the C.G. base ass'y.

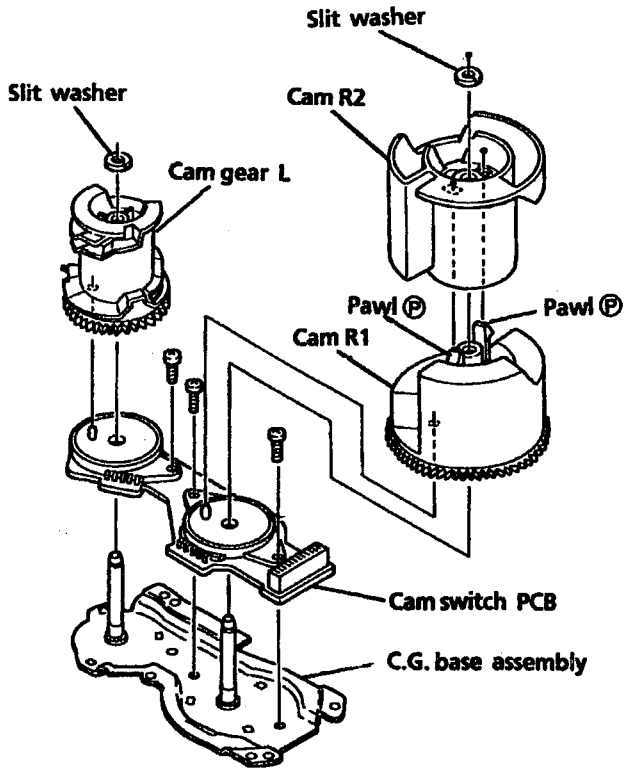

Fig. 41

(27) Removal of C.G base ass'y

Remove 3 screws Ⓠ securing the C.G. base ass'y. (See Fig. 41 and 42.)

[NOTE] Set the drive unit's pawl Ⓡ so that it is positioned as shown in Fig. 42.
Confirm that the cam gear L engages with the gear unit by rotating the cam gear L.

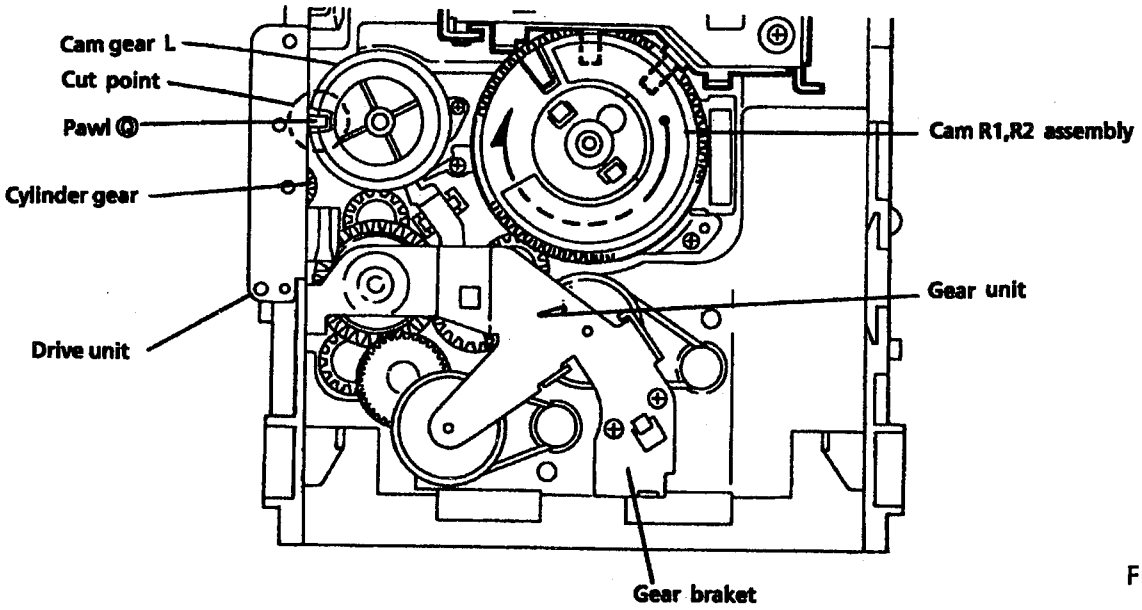

Fig. 42

Ⓠ .. SPST2606Z

(28) Removing the Pickup
1. Remove the CD mech. assembly.
2. Release the shaft to remove the pickup.

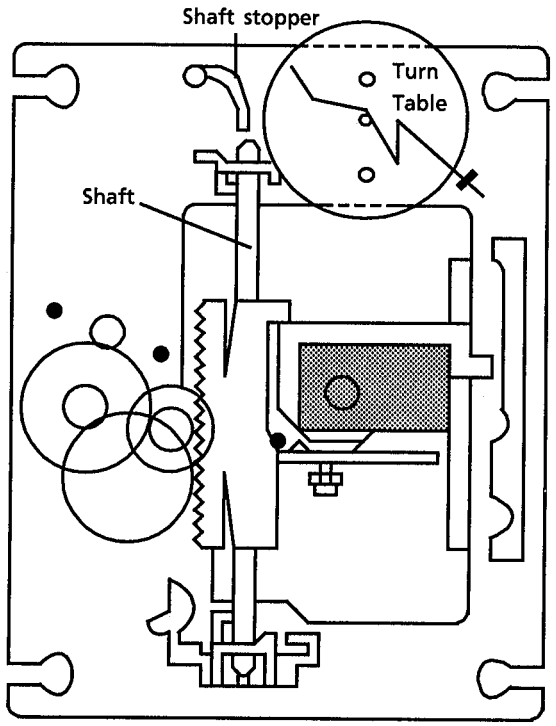

Fig. 43

(29) Spindle motor installation
1. Tighten the 2 screws to the same torque.
2. Fasten the spindle and feed motor P.C. board with the screw and solder.
3. Install the turntable.When installing, press straight down at the center of the turntable until the distance from the surface of the mech. base to the turntable is exactly 19.4±0.1mm.

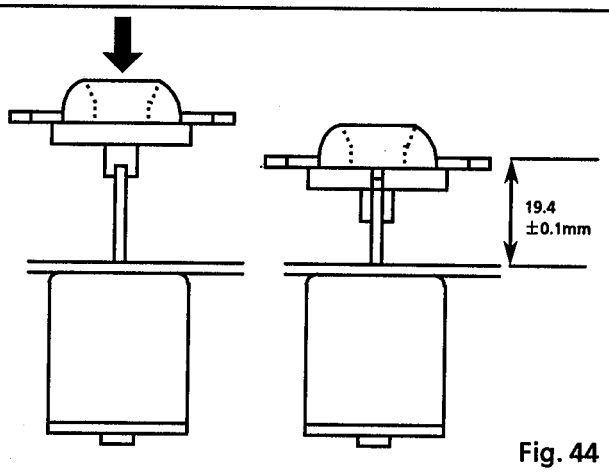

Fig. 44

(30) Removing the Spindle motor
1. Remove the CD mech. assembly.
2. Remove the turntable, and remove the 2 screws Ⓧ retaining the spindle motor.
3. Remove the screw retaining the spindle and feed motor circuit board and unsolder it.

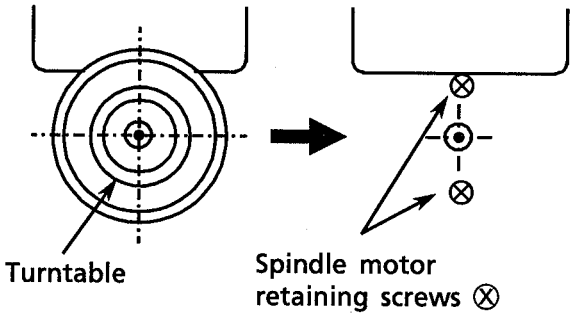

Fig. 45

(31) After inserting the turntable, bond the motor shaft and turntable together (at the section marked by an arrow in fig 46 on the left below).

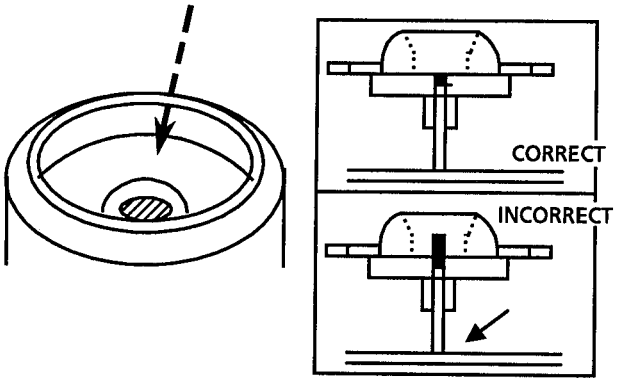

Fig. 46

(32) Use "LOCKTITE" #460 bonding agent, and apply as little as possible.

Take care not to allow any excess bonding agent to get onto the turntable.

Be extremely careful not to allow bonding agent to adhere to the motor bearing (the section marked by an allow in fig 46 on the right).

Ⓧ .. SDSP2003N

Adjustment procedures

■ Tuner section

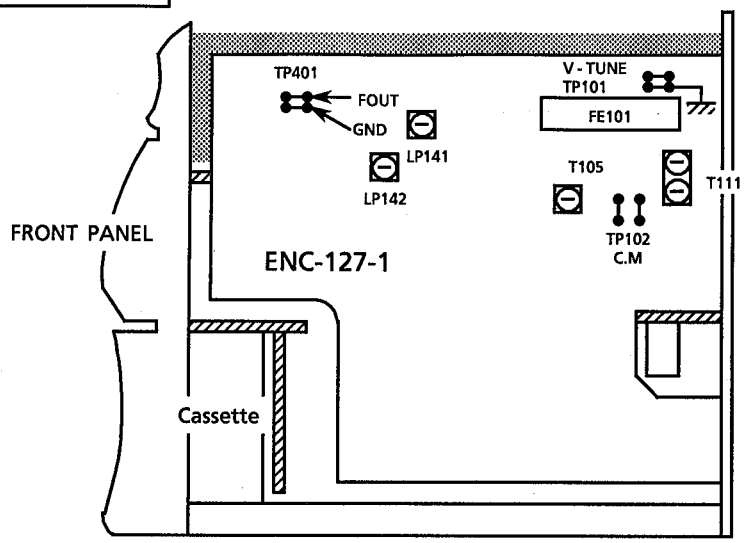

Fig.1

Clock Adjustment

1. After connecting B213 and B214 with some wire as shown in the figure below, connect the AC power cord into an AC outlet.
2. Confirm that the display is off and remove the wire.
3. Connect a frequency counter to TP401 B268 and B349.
4. Confirm the frequency 50000±0.29Hz.

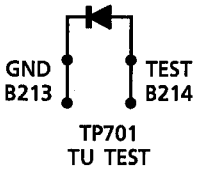

ENB-219-1(Front PCB)

(1) Tuning voltage

Confirm the voltages at TP101 is within the standard values shown in the table below. If the voltages are not satisfied, replace T111 for MW 5or FE101 for FM.

FM Tuning voltage (Unit : V)

Area	Frequency			
	64.0MHz	74.0MHz	87.5MHz	108MHz
Universal	—	—	1.6±1.0 (V)	8.0±2.0 (V)

AM Tuning voltage (Unit : V)

Area	Frequency (MW)							Frequency (LW)	
	522KHz	530KHz	531KHz	1600KHz	1602KHz	1629KHz	1710KHz	144kHz	288kHz
U,UT,UB,UP,US(Channel Space 9kHz)	—	—	>0.8	—	<7.9	—	—	—	—
Universal(Channel Space 10kHz)	—	>0.8	—	<7.9	—	—	—	—	—

(2) FM center meter

Receive a broadcast which understanding the frequency by using the function of 'MANUAL SEARCH'. Adjust T105 (detector coil) so that the voltage at TP102 becomes 0±1.5mV.

The Marks for Designated Areas

J	the U.S.A.	A	Australia	C	Canada	VX	East Europe
G	Germany	U	Universal	US	Singapore	UT	Taiwan
EF	Continental Europe	EN	Scandinavia	GI	Italy	BS	the U.K.
UB	Hong Kong	UP	Korea	No mark indicates all area.			

■ Deck Adjiust point

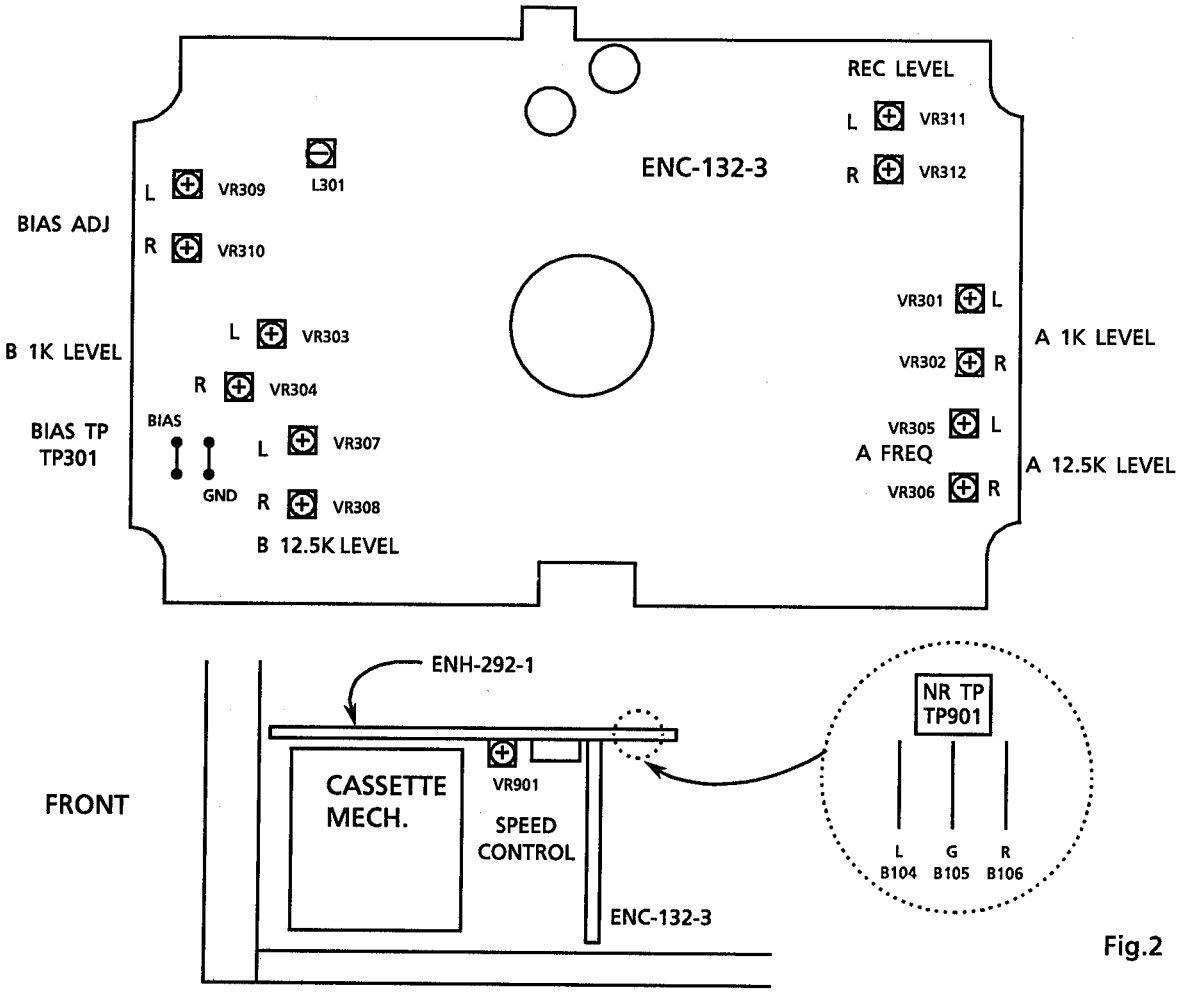

Fig.2

Deck section

1. Measuring instruments

Audio frequency signal generator (0dbs output at the 600 ohm output terminal from 50Hz to 20KHz)
Electronic voltmeter
Frequency counter
Wow & Flutter meter
Distortion Meter with band pass filter
Attenuator (600 ohm impedance)
A resistor with 600Ω

Tape No.	Frequency	Level (Wow & Flutter)	Purpose
VTT-703L	10kHz	−10dBs	Head azimuth , Frequency Response
VTT-712	3000Hz	0dBs 0.025%WRMS	Tape Speed , Wow & Flutter
VTT-724	1kHz	−4dBs	Standard Level
TMT-6447	—	—	Blank Skip
TMT-6247 , TMT-6237	—	—	Music Scan
TMT-7088S	—	—	Recording standard Normal : UR
AC-712	—	—	Recording standard METAL : MA
AC-513	—	—	Recording standard CrO_2 : SA
TW-2111, TW-2121	—	—	Forward / reverse play torque measuring
TW-2231	—	—	Feed forward / rewind torque measuring
C-120 Tape	—	—	Confirming the tape running

2.Adjustment and repairing the mechanism

Item	Adjustment method	Standard value	Remarks
Head azimuth	Deck A 1. Connect an electronic voltmeter to the NR TP901(figure 1) to playback VTT-703L. 2. Adjust screw Ⓐ so that the indication of the voltmeter becomes maximum when PLAY (▶) is pressed. 3. Adjust screw Ⓑ so that the indication of the voltmeter becomes maximum when PLAY (◀) is pressed. Deck B 4. Adjust screw Ⓒ so that the indication of the voltmeter becomes maximum when PLAY (▶) is pressed. 5. Adjust screw Ⓓ so that the indication of the voltmeter becomes maximum when PLAY (◀) is pressed. 6. After making the adjustment,apply screw lock to prevent screws Ⓐ, Ⓑ, Ⓒ and Ⓓ coming loose.	Maximum	1. **Refer to figure 3.** 2. When the specified characteristic cannot be obtained because of head wear, excessive magnetization, etc., replace the head assembly and adjust the head azimuth. Also, perform the electric adjustment. 3. When there is the difference of more than 3 ~ 4 dB between left and right output levels, replace the head assembly to avoid complaints.
Playback torque	1. Measure the torque in the playback mode by the torque meter.	26 ~ 72 g-cm	When the standard torque cannot be obtained, replace the FR arm assembly or motor.
Fast forward torque	1. Measure the torque in the fast forward mode by the torque meter.	75 ~ 175 g-cm	When the standard torque cannot be obtained,replace the FR arm assembly or motor.
Rewind torque	1. Measure the torque in the rewind mode by the torque meter.	75~ 175 g-cm	When the standard torque cannot be obtained, replace the FR arm assembly or motor.
Wow & flutter	1. Connect the wow & flutter meter to the DOLBY TP(figure 1) and play back VTT-712. 2. Its reading should be within 0.25% (WTD).	Less than 0.25%	As a complaint may occur if the wow & flutter fluctuates by 0.1% even though it is allowed in the standard, repairing is required.

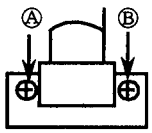

Deck A

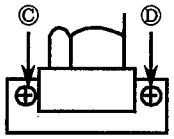

Deck B

Fig.3

3. Electrical Adjustments (Make the following adjustments after adjusting the head azimuth.)

In principle, the adjustments should be made in the following sequence.
Set the NR switch to OFF and the BEAT CUT switch to "1".
Adjustments marked with an asterisk (*) should always be made after the head is replaced

0dBs=0.775V

Item	Adjustment Method	Adjustment Location	Standard Value	Remarks
Tape Speed	1. Connect a frequency counter to the NR TP 901 (figure 1) and play back VTT-712. 2. Adjust the semi-fixed resistor VR935 on FMH-005-1 (figure 1).	VR935	3,000 Hz ±10Hz	Connect a wow & flutter meter with a built-in frequency counter to the speaker terminals.
Standard level (Playback Level)	1. Connect an electronic voltmeter to the NR TP901(figure 1). Play back VTT-724 (1 kHz : −4dBs) to adjust the semi-fixed resistors.	**Deck A** L: VR301 R: VR302 **Deck B** L: VR303 R: VR304	488mV (−4dBs)	1) The playback level varies when the head is replaced so should be adjusted. Use an electronic voltmeter with an impedance of 100 kΩ or more.
Playback Frequency Response	1. Connect an electronic voltmeter to the NR TP 901(figure 1). 2. Play VTT-703L (10kHz : −10dBs) and adjust semi-fixed resistors to obtain the standard values.	**Deck A** L: VR305 R: VR306 **Deck B** L: VR307 R: VR308	245mV (−10dBs)	—
Recording Bias Frequency	1. Connect a frequency counter to the BIAS TP(figure 1), and perform a recording to adjust bias frequency.	L301	105 kHz ±5 kHz	
Record / Play Frequency Response (Bias current)	1. Supply 1kHz and 12.5kHz with 30mV signals to AUX terminals respectively to record them. 2. Connect an electronic voltmeter to the NR TP901 (figure 1) to confirm the recorded values. 3. If the values are not satisfied, adjust the semi-fixed resistors and record the signal again to confirm the recorded values.	L : VR309 R : VR310	0±2 dB with 1 kHz as the standard.	**Refer to figure 4 below.** 1) The recording and playback frequency response of a cassette deck are adjusted by adjusting the bias. 2) Perform the adjustment with normal tape and confirm that the values are within the range for metal tape.

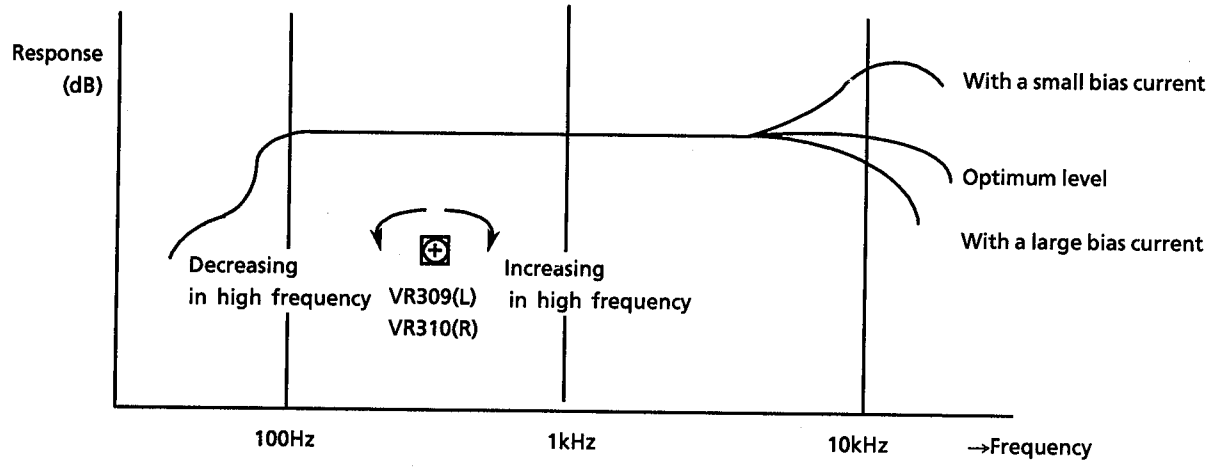

Fig.4

Flow of Functional Operation Until TOC is Read

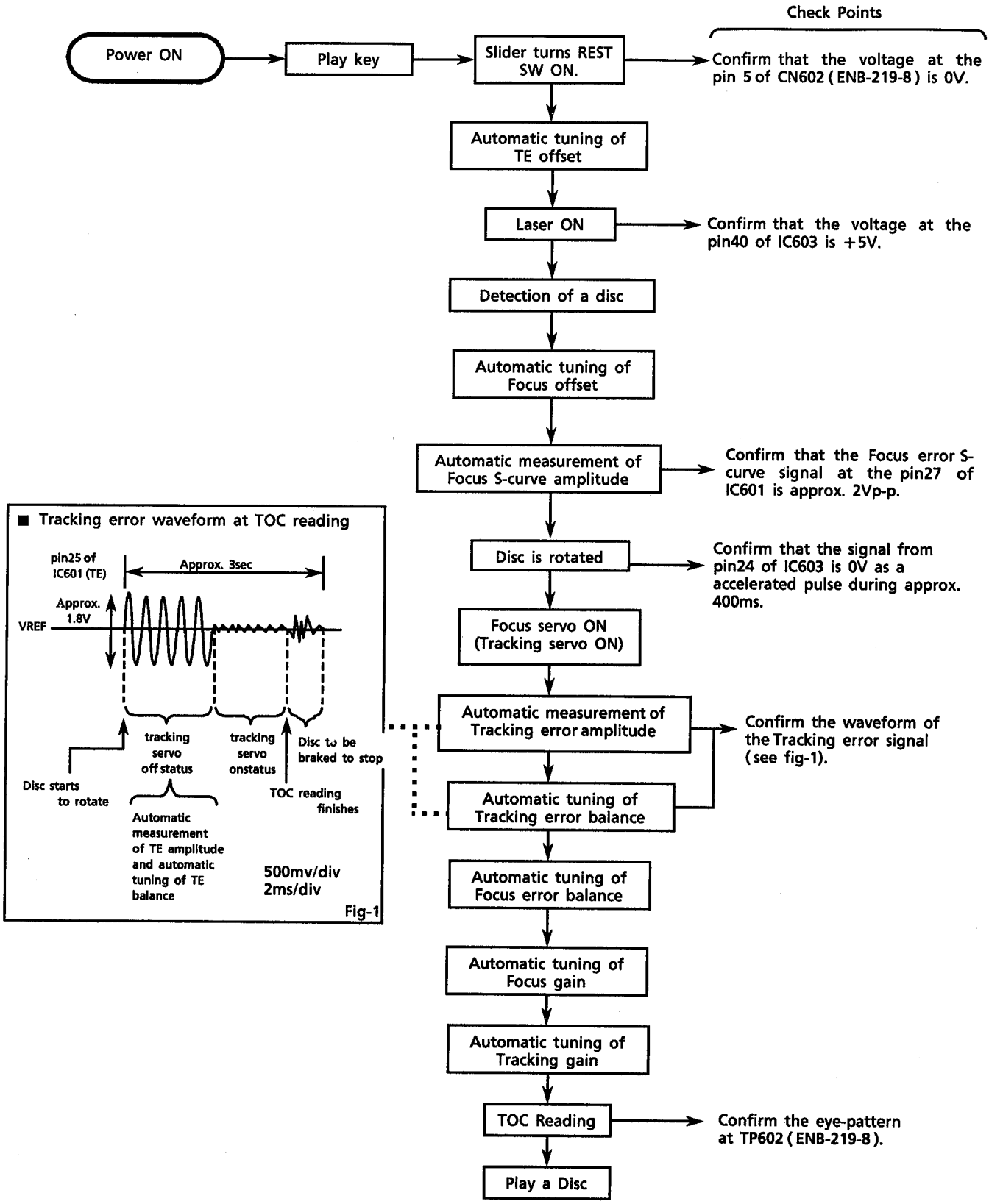

Maintenance of Laser Pickup

(1) Cleaning the pick up lens

Befor you replace the pick up, please try to clean the lens with a alcohol soaked cotton swab.

(2) Life of the laser diode (Fig.1)

When the life of the laser diode has expired, the following symptoms will appear.

(1) The level of RF output (EFM output: ampli tude of eye pattern) will be low.

(2) The drive current required by the laser diode will be increased. In such a case, check the life of the laser diode following the flowchart below.

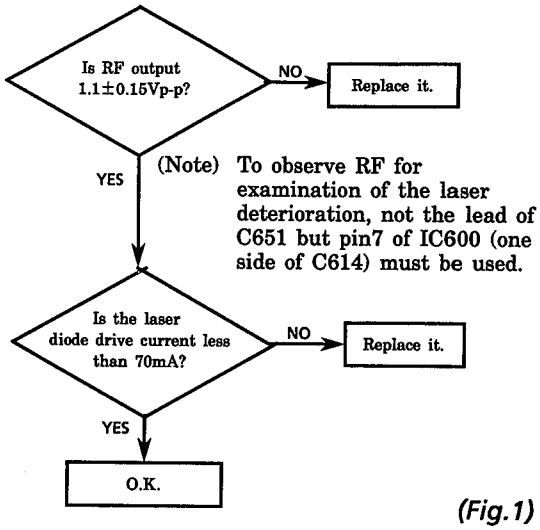

(Fig.1)

(3) Semi-fixed resistor on the APC PC board

The semi-fixed resistor on the APC printed circuit board which is attached to the pickup is used to adjust the laser power. Since this adjustment should be performed to match the characteristics of the whole optical block, do not touch the semi-fixed resistor.

If the laser power is lower than the specified value, the laser diode is almost worn out, and the laser pickup should be replaced.

If the semi-fixed resistor is adjusted while the pickup is functioning normally, the laser pickup may be damaged due to excessive current.

Replacement of Laser Pickup

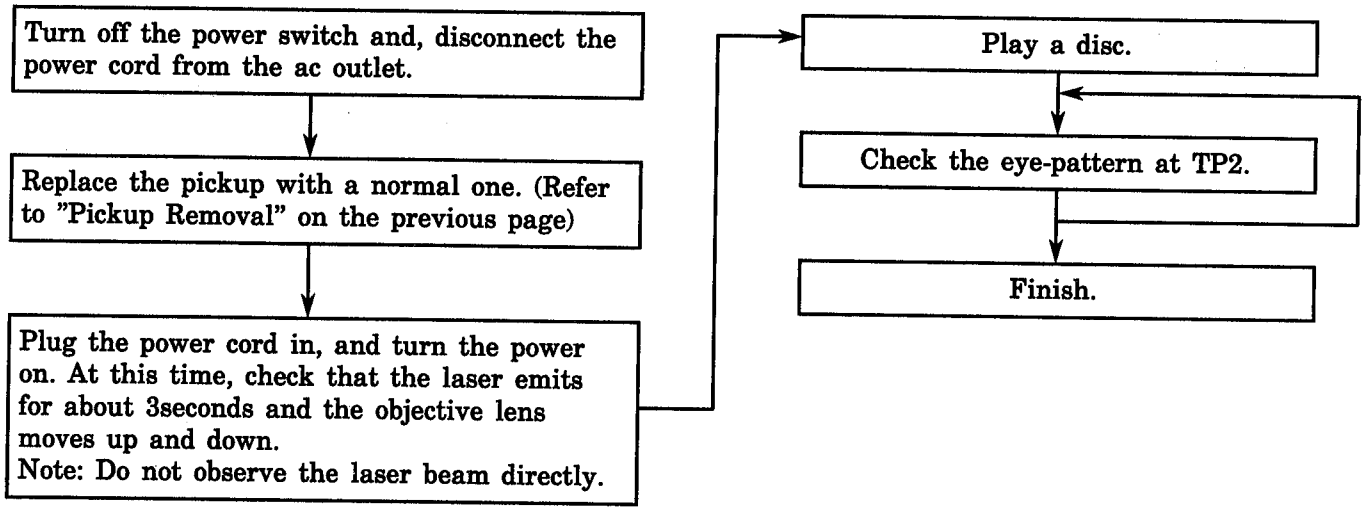

Self-diagnosis for pickup

From DCS output, this model reads automatically adjusted data for CD so that the pickup can be judged defective or not. Following shows its details.

1. Necessary items

① DCS → 232C Converting board (No.EBSJ1022)
② 232C cord (straight)
③ Floppy disc for self-diagnosis (No.EBSJ1022)
④ DCS cord
⑤Cord of Power supply E407992-001
⑥ Power supply DC 6.3V (AA-SV11J--America/Canada) (AA-SV11Bs--the UK) (AA-SV11G--Germany) (AA-SV11EF--Continental Europe) (AA-SV11U--the Other aria)
⑦ CD (without scratches or damage)

2. Connection

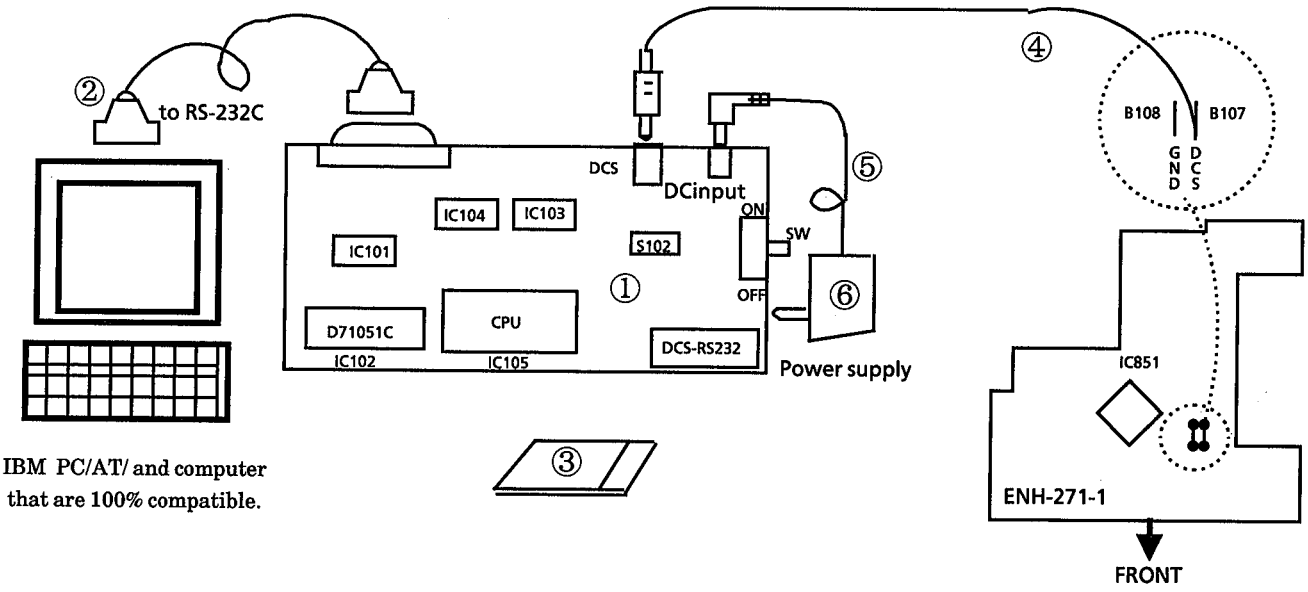

3. Procedure to use CD self-diagnosis jig by IBM PC

Two com pins are frequently adopted in recent IBM AT and its substitute RS232C port.
This jig can also use both COM1 and COM2.
DEFAULT is COM1. Indicate "2" to the option only for COM2.

When COM1 is used,···

I AUTO 01

When COM2 is used,···

I AUTO 02

[NOTE] Press ESC key to stop processing during the operation.
Contents of the attached floppy IBM self-diagnosis program VER.1.00 Execution file.
(Mistake the conection/Mistake the polarity)

4. Judgment

To judge whether pickup is defective or not, firstly process of automatic adjustment is checked by automatic adjustment flag. And, the value(automatic adjustment value for focus gain) displayed on the screen is used for its final judgment.

It is supposed that the pickup is defective or the signal path is faulty if the Flag1 or Flag0 indicates not "F" but a figure.
(See the following example.)

Flag1	Flag0	Details	Supposed cause
0	0	Automatic adjustment for tracking offset is failed.	The automatic adjustment is not completed. (Trouble in circuit.)
0	1	Automatic adjustment for focus offset is failed. (Disc does not rotate.)	The lens does not move. (Power supply is not turned on. Wire is cut.)
0	3	Automatic rough adjustment for focus gain is failed.	
0	7	Automatic rough adjustment for tracking gain is failed. (The focus and tracking gain are not locked though the disc rotates.)	Laser deterioration (low RF signal output). Offset beam.
0	F	Disc rotates, focus and tracking gain are locked and automatic rough adjustment for tracking gain is also completed though automatic adjustment for tracking balance is failed.	Laser deterioration (low RF signal output). Offset beam.
1	F	Automatic adjustment for focus balance is failed. (TOC is not read tough the disc rotates.)	RF signal output is low. Tracking loop is not turned on. RF jitter is too much.
3	F	Automatic rough adjustment for focus gain is failed.	
7	F	Automatic rough adjustment for tracking gain is failed.	
F	F	All automatic adjustments are completed.	

The pickup is judged defective though the Flag0 and Flag1 indicate "F" and those adjustments are completed if the adjustment value exceeds 19dB.

Block Diagram

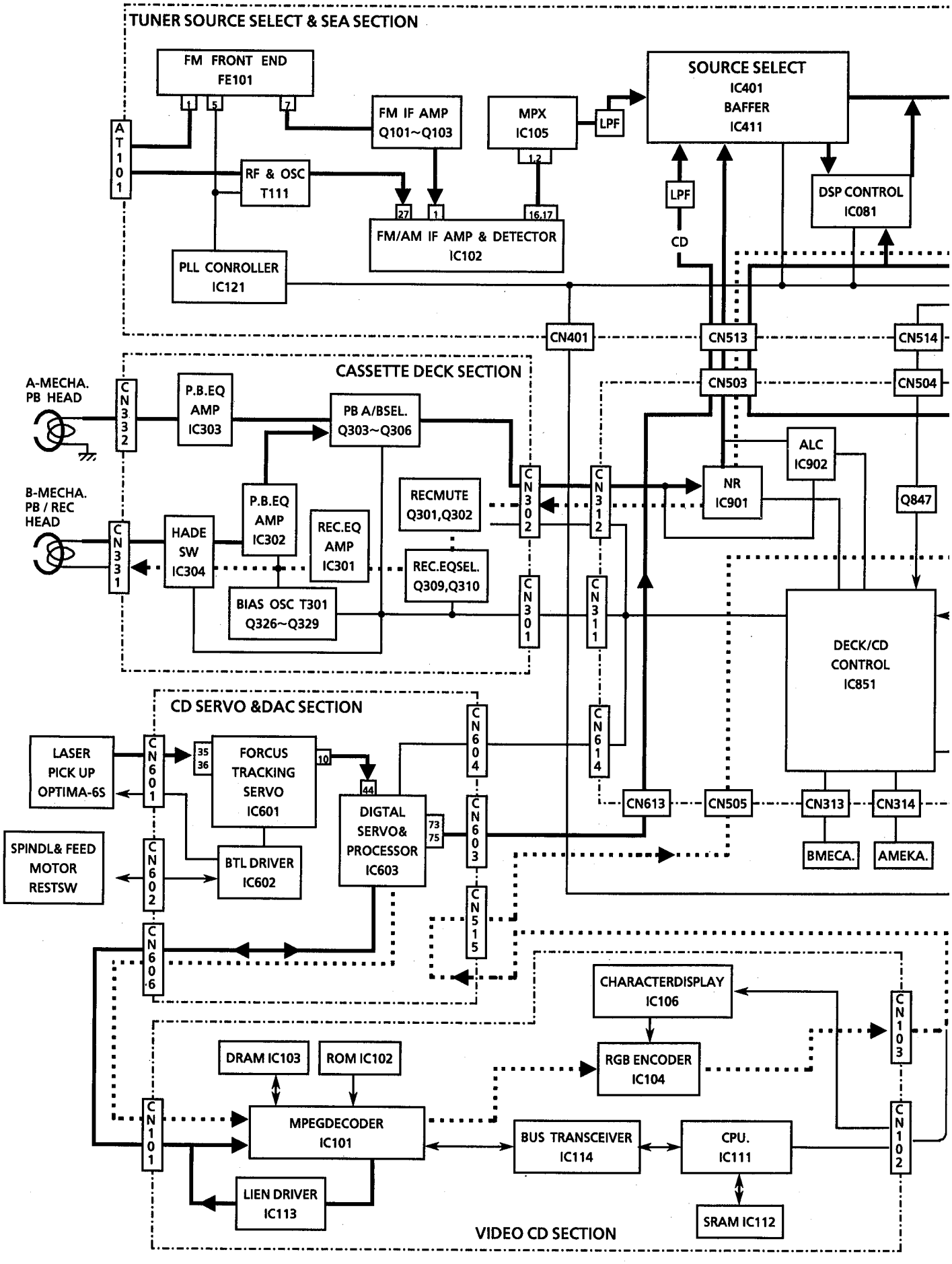

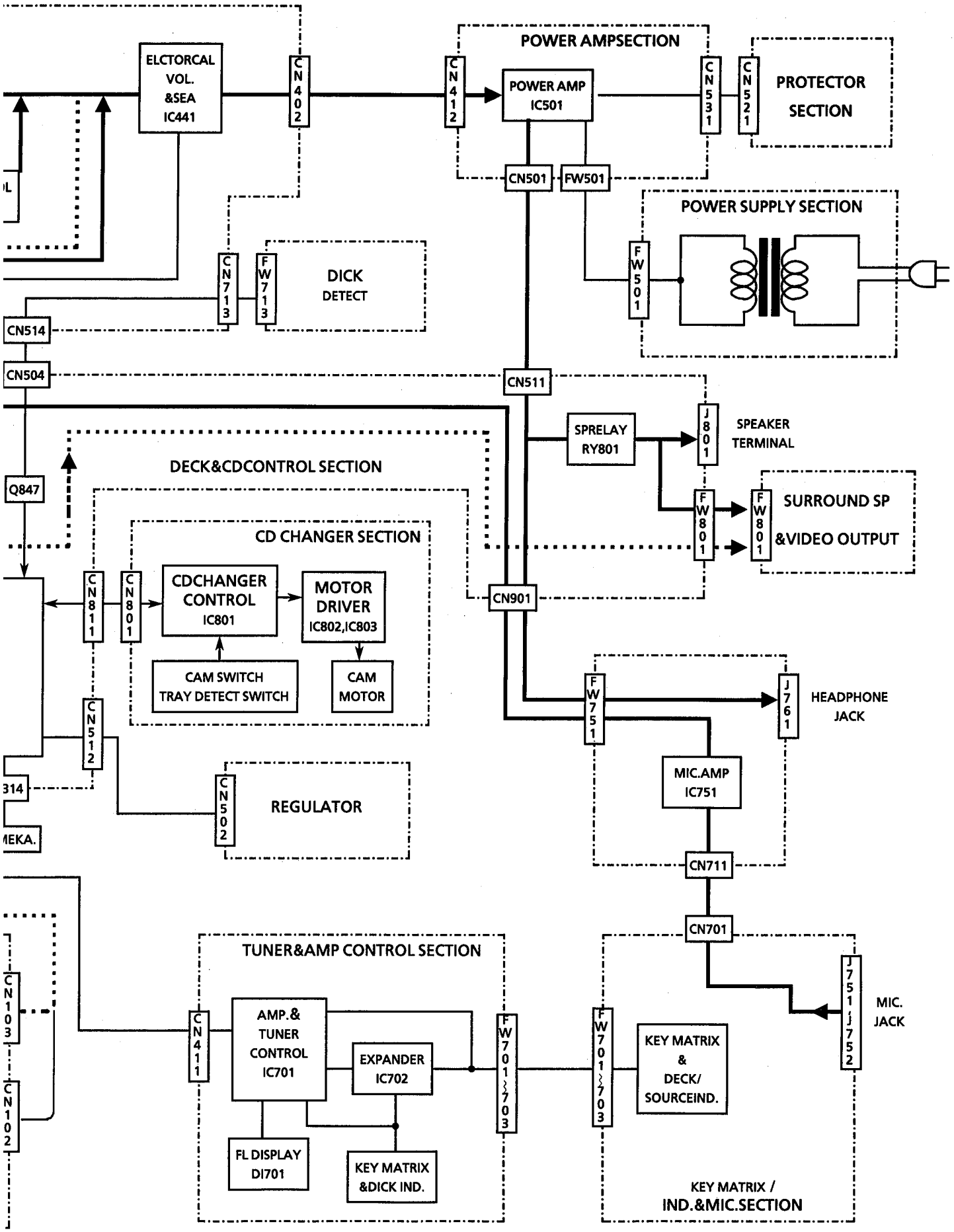
POWER AMPSECTION
ELCTORCAL VOL. &SEA IC441
CN402
CN412
POWER AMP IC501
CN531
CN521
PROTECTOR SECTION
CN501
FW501
POWER SUPPLY SECTION
FW501
CN713
FW713
DICK DETECT
CN514
CN504
CN511
SPRELAY RY801
J801
SPEAKER TERMINAL
DECK&CDCONTROL SECTION
Q847
FW801
FW801
SURROUND SP &VIDEO OUTPUT
CD CHANGER SECTION
CN811
CN801
CDCHANGER CONTROL IC801
MOTOR DRIVER IC802,IC803
CAM SWITCH TRAY DETECT SWITCH
CAM MOTOR
CN901
FW751
J761
HEADPHONE JACK
CN512
MIC.AMP IC751
CN502
REGULATOR
CN711
CN701
TUNER&AMP CONTROL SECTION
CN411
AMP.& TUNER CONTROL IC701
EXPANDER IC702
FW701~703
FW701~703
KEY MATRIX & DECK/ SOURCEIND.
J751 J752
MIC. JACK
FL DISPLAY DI701
KEY MATRIX &DICK IND.
KEY MATRIX / IND.&MIC.SECTION

Schematic Diagrams

■ Power Primary Section

VERSION CODES

UB : HONGKONG
US : SINGAPORE
UT : TAIWAN
U : UNIVERSAL EXCEPT ALL OF ABOVES

EXPLANATION OF OVERALL OF SCHEMA.
MODEL CA-V805T

SHEET NUMBER	MODEL NUMBERS TO BE APPLIED	CIRCUITS DESCRIPTION
1/7	CA-V805T	·PRIMARY WITH MAINS TRANSFORMER
2/7	CA-V805T	·DC REGULATORS/AUDIO OUTPUT ·TAPE DECK MECHANISMS CONTROL ·SYSTEM CONTROL LSI FOR TAPE DECK CD
3/7	CA-V805T	·EXTERNAL SIGNAL INPUT ·SOURCE SELECTOR SWITCH/DSP/TUNER IF/FM MULTIPI
4/7	CA-V805T	·FL DISPLAY/USER CONTROL KEYS/SYSTEM CONTROL L MIC AMPLIFIER
5/7	CA-V805T	·MISCELLANEOUS CIRCUITS FOR TAPE DECK SUCH AS AMPLIFIER, SWITCH, BIAS AND OTHERS /DIGITAL PRO AND SERVO FOR AUDIO DISC
6/7	CA-V805T	·SYSTEM CONTROL LSI FOR VIDEO CD, CD GRAPHICS
7/7	CA-V805T	·AUDIO DISC MECHANISMS CONTROL

NOTES :
MARK (*) IS TO SHOW DEVIATION IN VERSIONS.
DETAILS ARE EXPLAINED NEAR THE MARK.

1. ⟶ indication main signal path.
2. ⇨ indication recording signal path.
3. ➡ indication video signal path.
4. When replacing the parts in the maked ⚠, be sure to use the designated parts to ensure safety.
5. The design and contents are subject to change without notice.

LTIPLEX

OL LSI/

AS
PROCESSOR

CS

POWER SUPPLY SECTION

U/UB/US

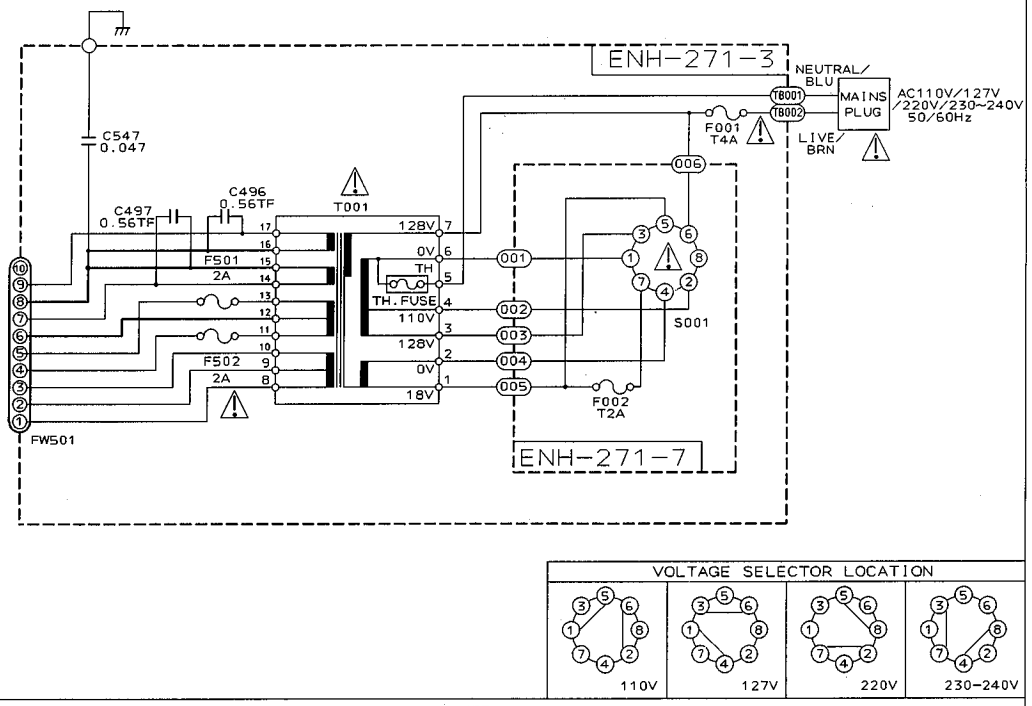

VOLTAGE SELECTOR LOCATION

UT

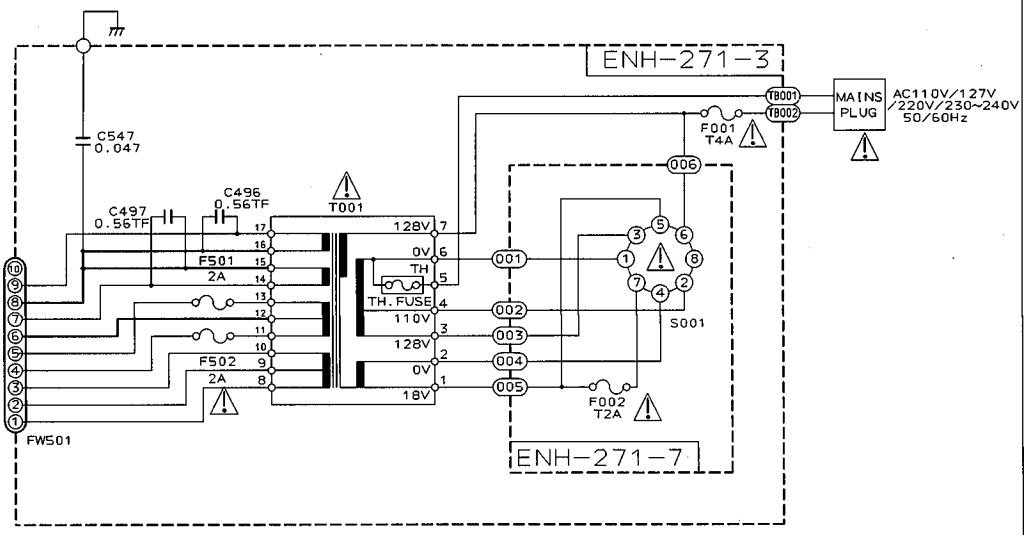

VOLTAGE SELECTOR LOCATION

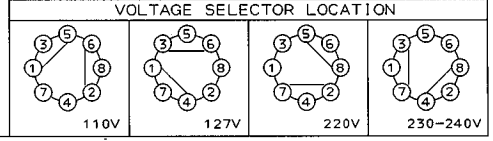

P2-43-a

P2-43-b

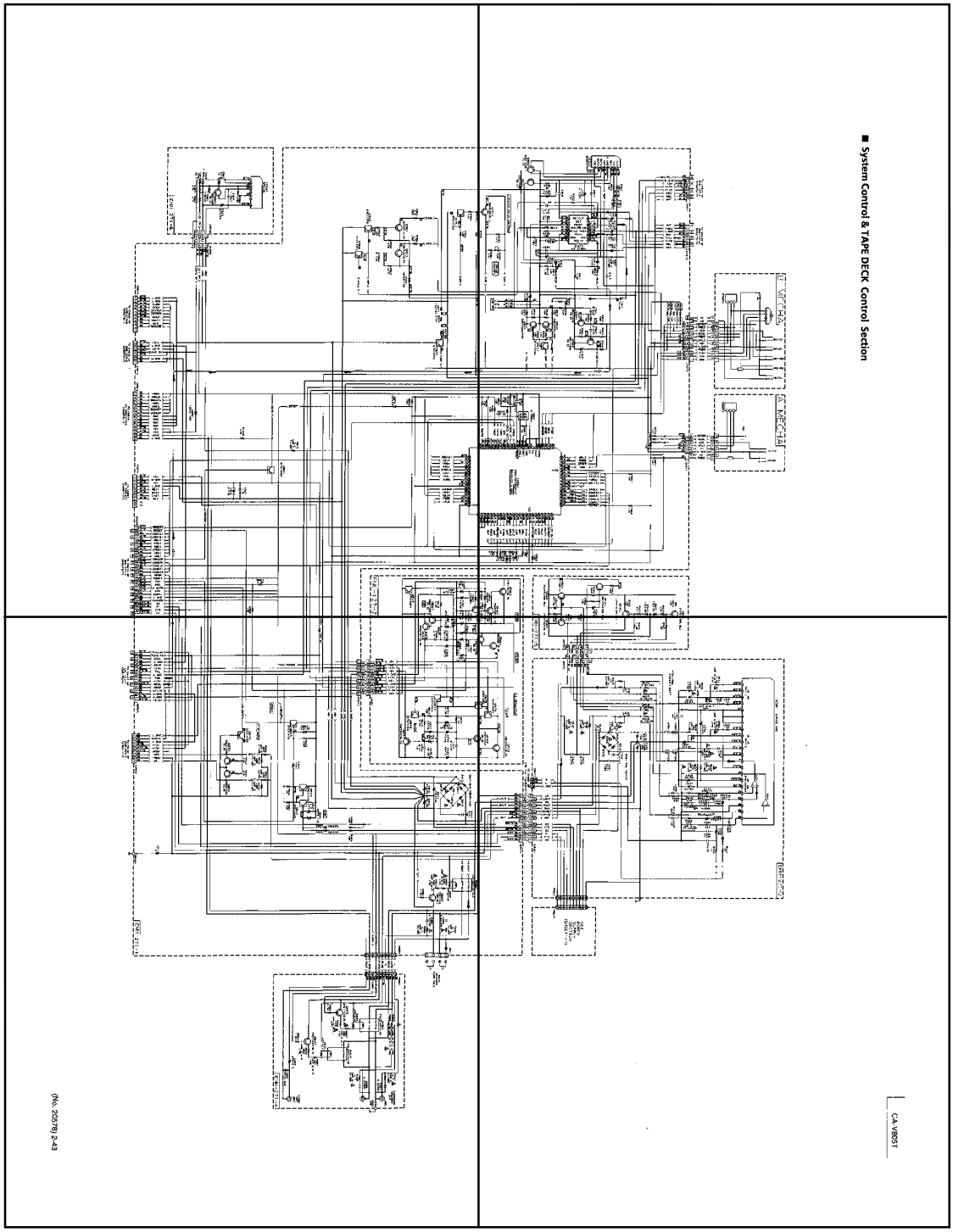

P2-43-c

P2-43-d

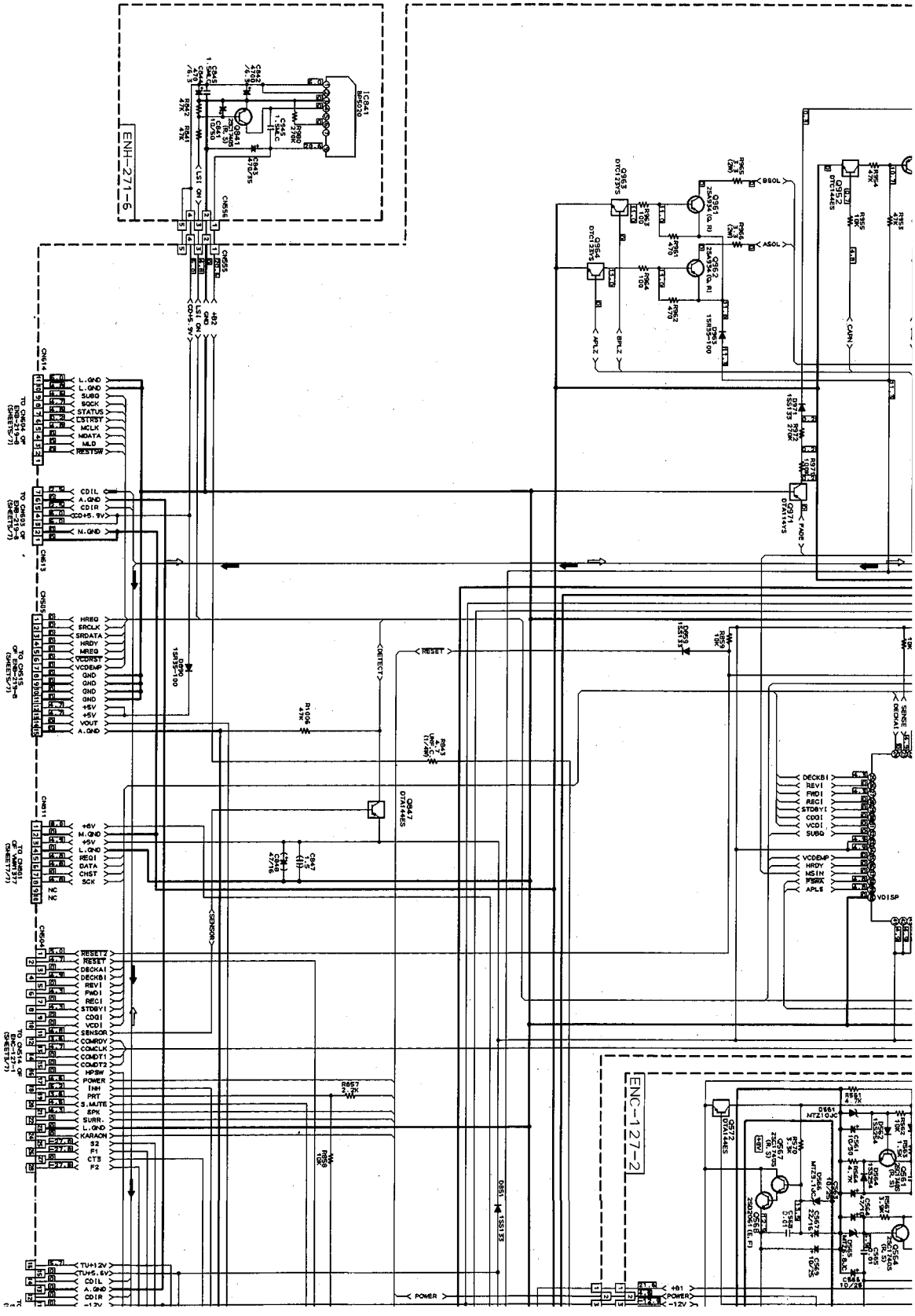
ENH-271-6
ENC-127-2
CN614
CN613
CN615
CN611
CN604
CN601
L.GND
SUBD
SCCK
STATUS
CNTRKY
MCLK
MDATA
MLD
RESTSW
CDIL
A.GND
CDI5V
N.GND
HREQ
SRCLK
SRDATA
HRDY
MREQ
VCDRST
VCDEMP
GND
+5V
VOUT
A.GND
+8V
M.GND
+5V
L.GND
REQI
DATA
CHST
SCK
RESETZ
RESET
DECKAI
DECKBI
REVI
FWDI
RECI
STDBYI
CDGI
VCDI
SENSOR
COMRDY
COMCLK
COMDT
COMDT2
HPSW
POWER
INH
PRT
S.MUTE
SPK
SURR.
L.GND
KARAON
S2
F1
CTS
F2
TU+12V
TU+5.6V
CDIL
A.GND
CDIR
-12V
DETECT
RESET
SENSE
DECKAI
DECKBI
REVI
RECI
STDBYI
CDGI
VCDI
SUBQ
VCDEMP
HRDY
MREQ
SRCLK
APLG
VDISP
POWER
+B1
-12V
BSOL
ASOL
CAIN
APLZ
BPLZ
Q952
Q953
Q954
Q961
Q962
Q963
Q964
Q971
Q972
Q973
Q974
Q975
Q976
Q977
Q978
Q979
Q980
Q981
Q982
Q983
Q984
Q985
Q986
Q987
Q988
Q989
Q990
Q991
Q992
Q993
Q994
Q995
Q996
Q997
Q998
Q999
Q1000
Q1001
Q1002
Q1003
Q1004
Q1005
Q1006
Q1007
Q1008
Q1009
Q1010

■ System Control & TAPE DECK Control Section

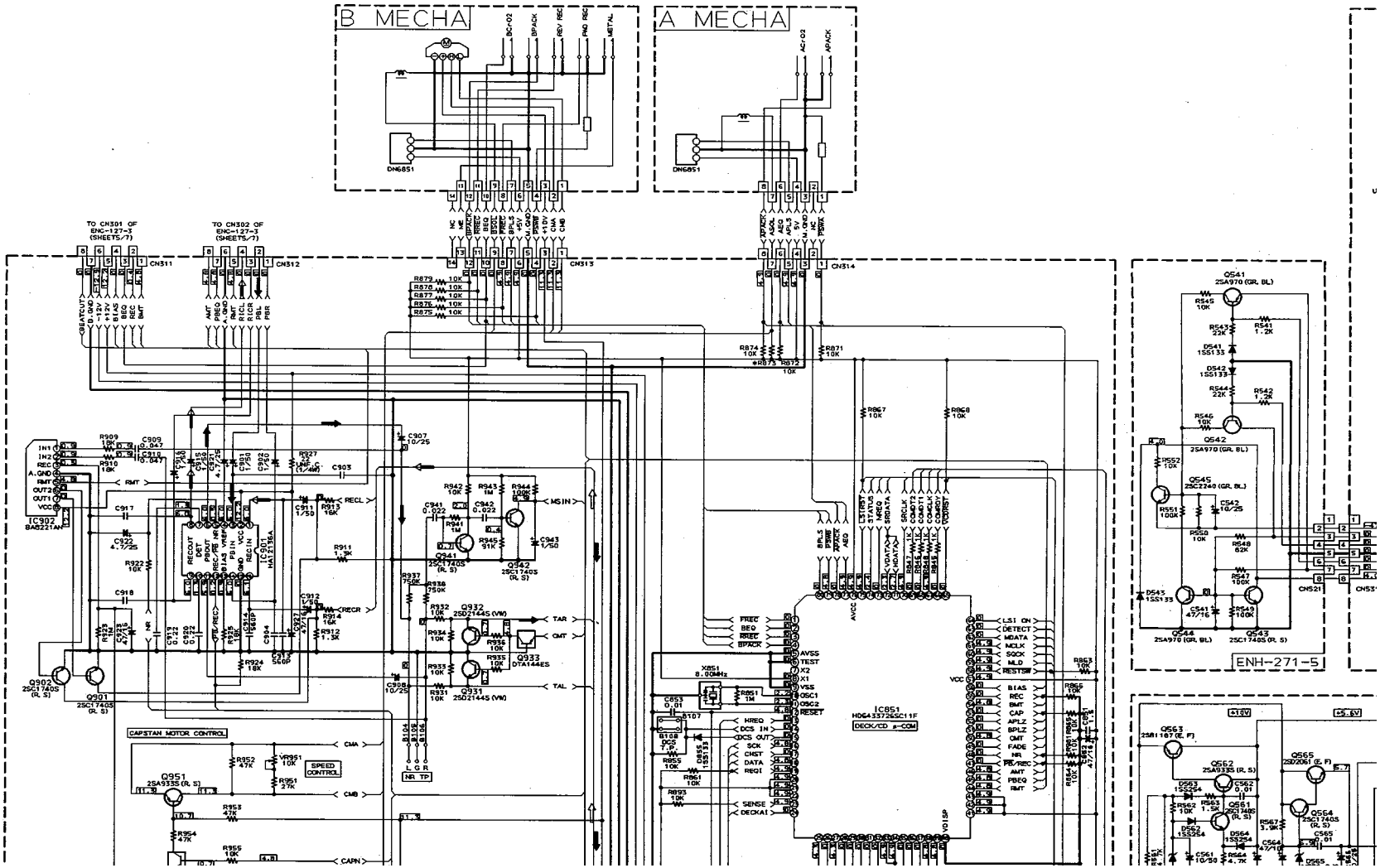

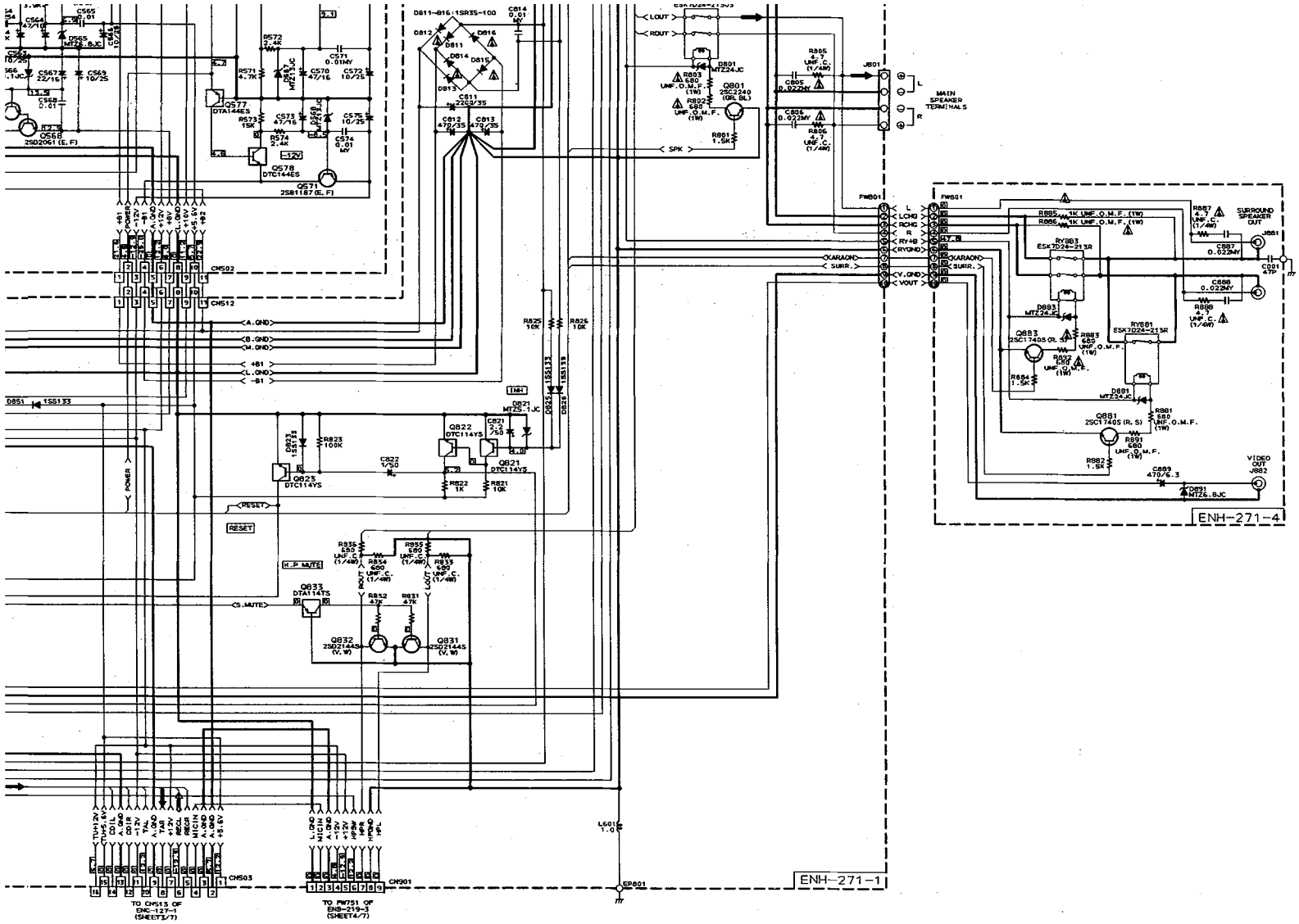
ENH-271-1
ENH-271-4
MAIN SPEAKER TERMINALS
SURROUND SPEAKER OUT
VIDEO OUT
POWER
RESET
H.P MUTE
S.MUTE
CN502
CN512
CN503
CN901
TO CN513 OF ENC-127-1 (SHEET3/7)
TO PW751 OF ENB-219-3 (SHEET4/7)

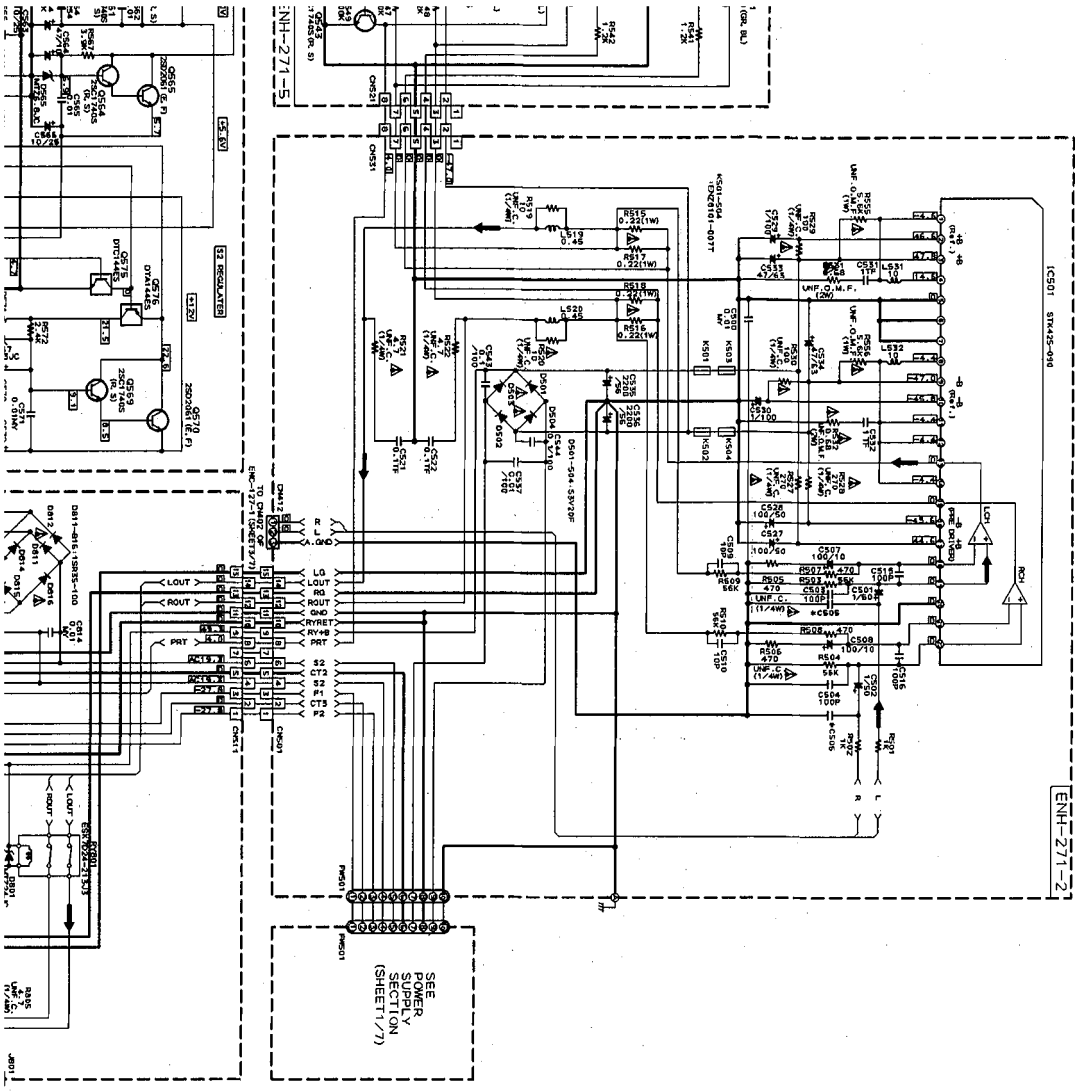
ENH-271-5
ENH-271-2
IC501 STK425-090
SEE POWER SUPPLY SECTION (SHEET1/7)
LOUT
ROUT
PRT
LG
RG
RYRET
RY+B
S2
CT2
F1
CT3
F2
A.GND
LCH
RCH

CA-V805T

P2-44-a P2-44-b

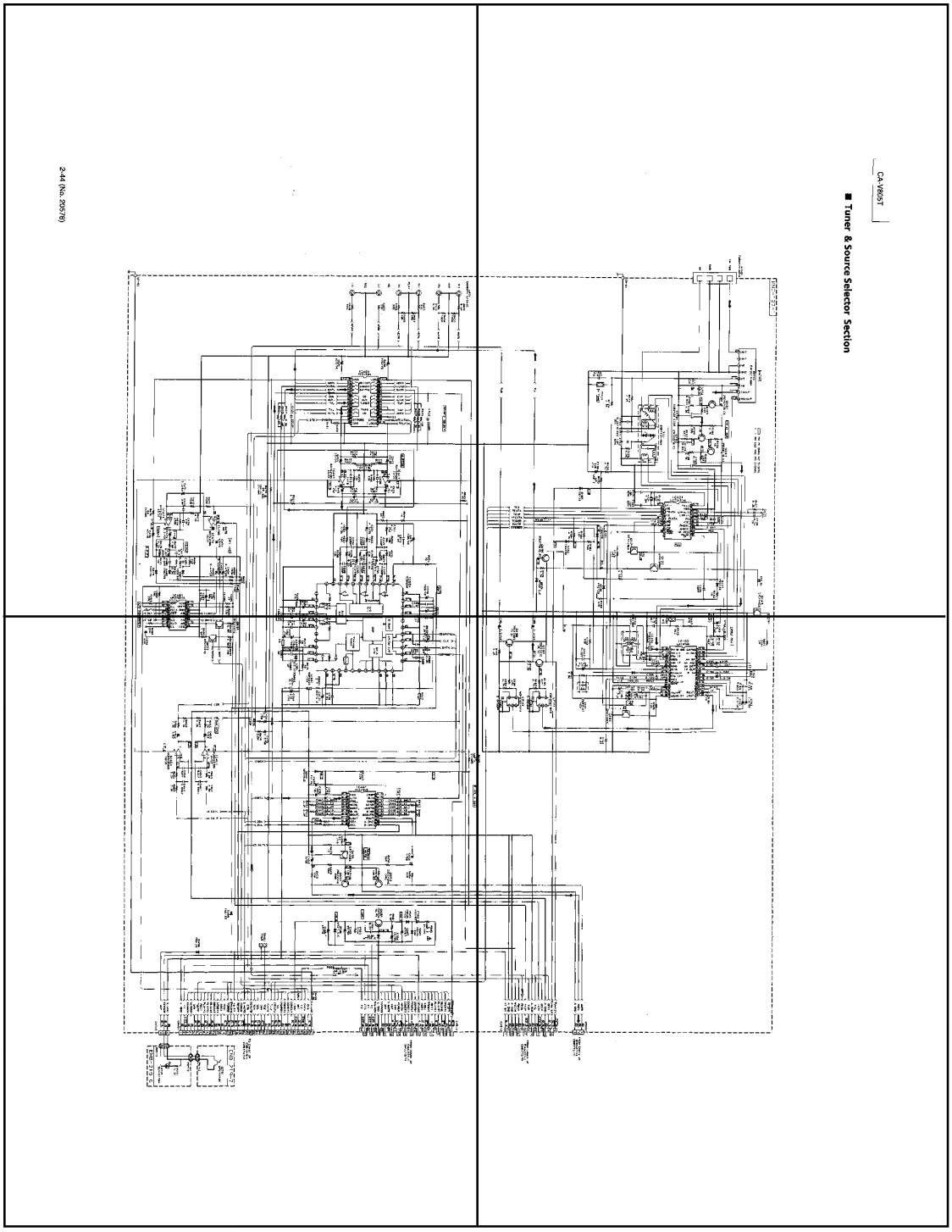

P2-44-c P2-44-d

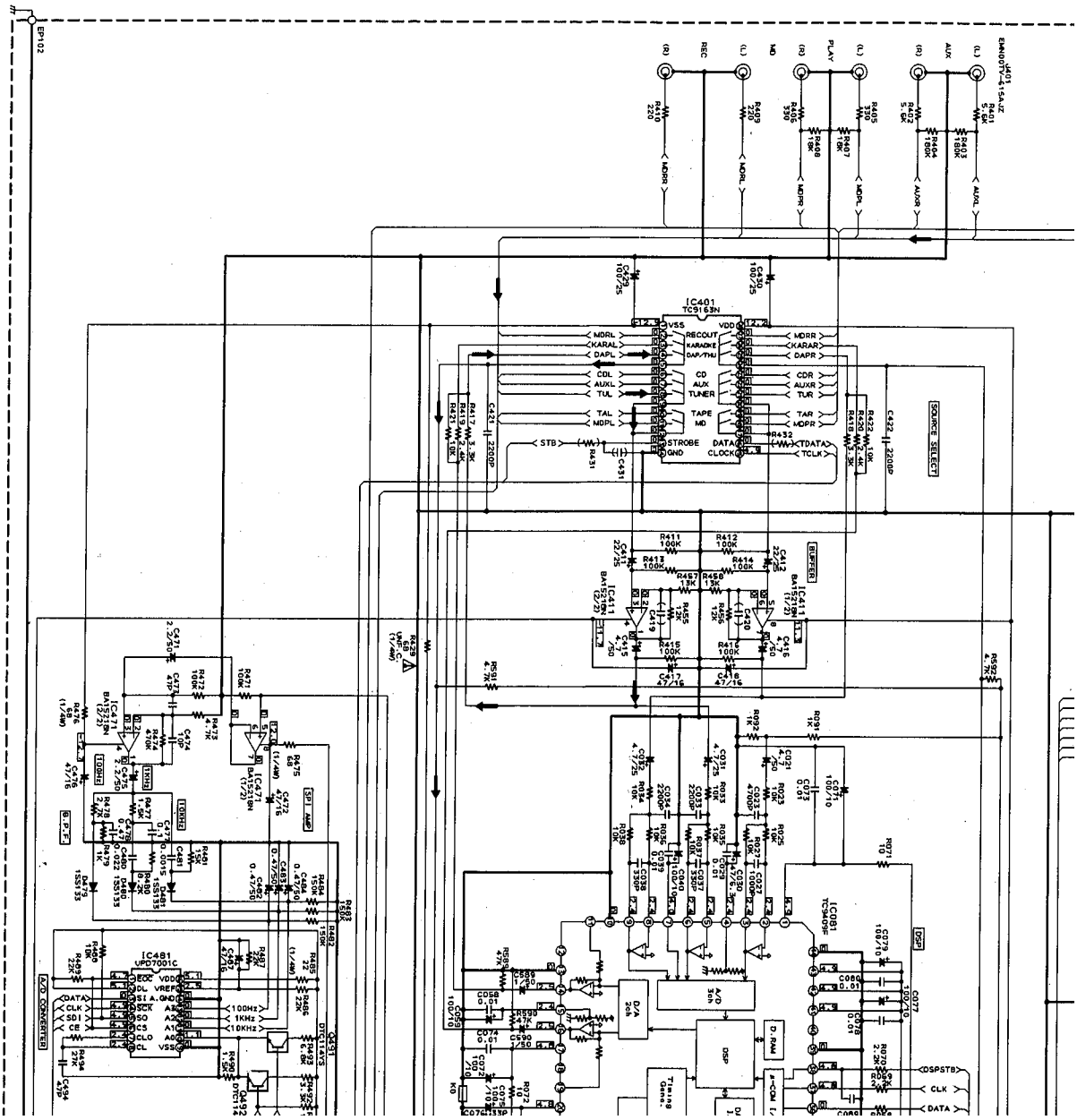

■ Tuner & Source Selector Section

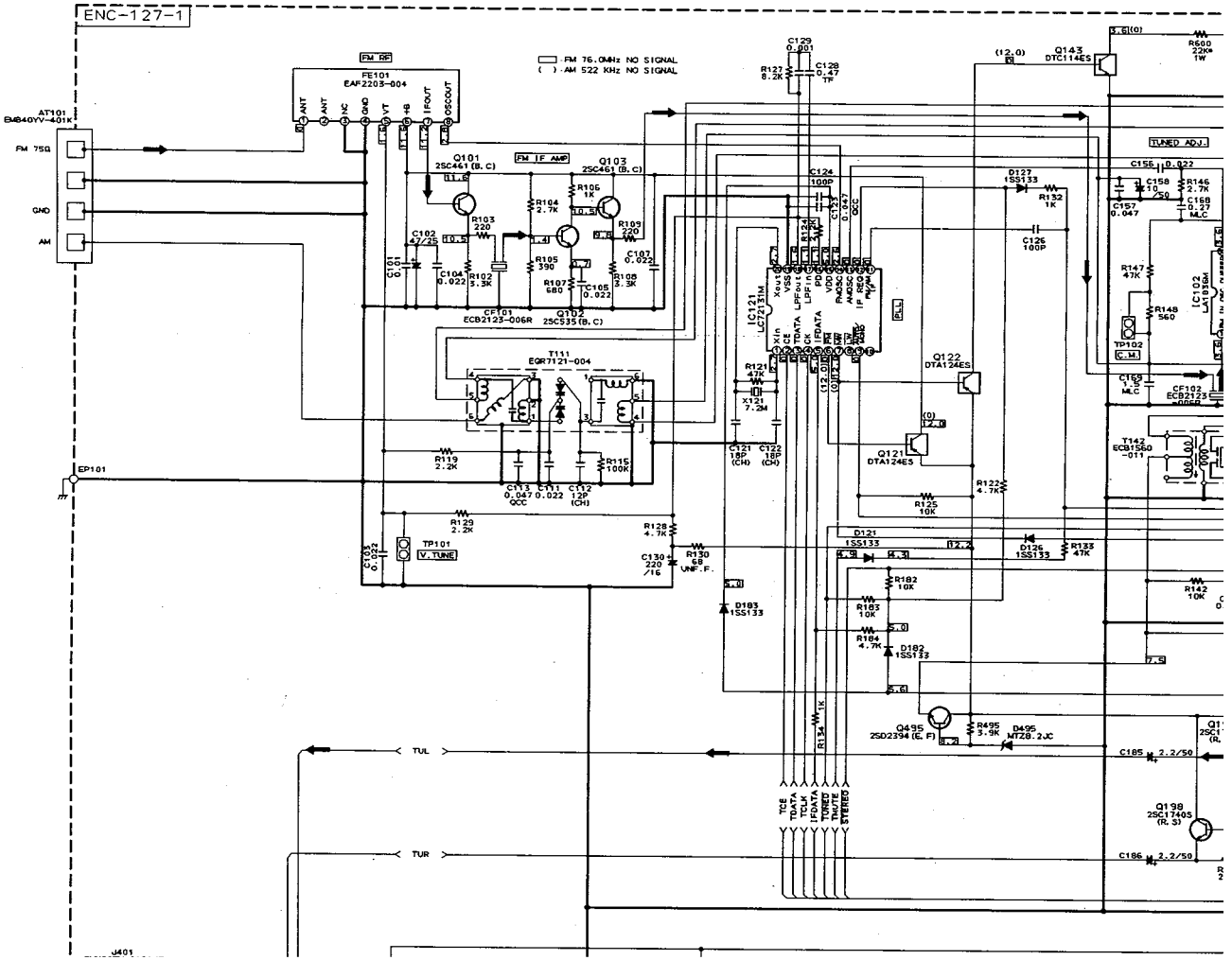

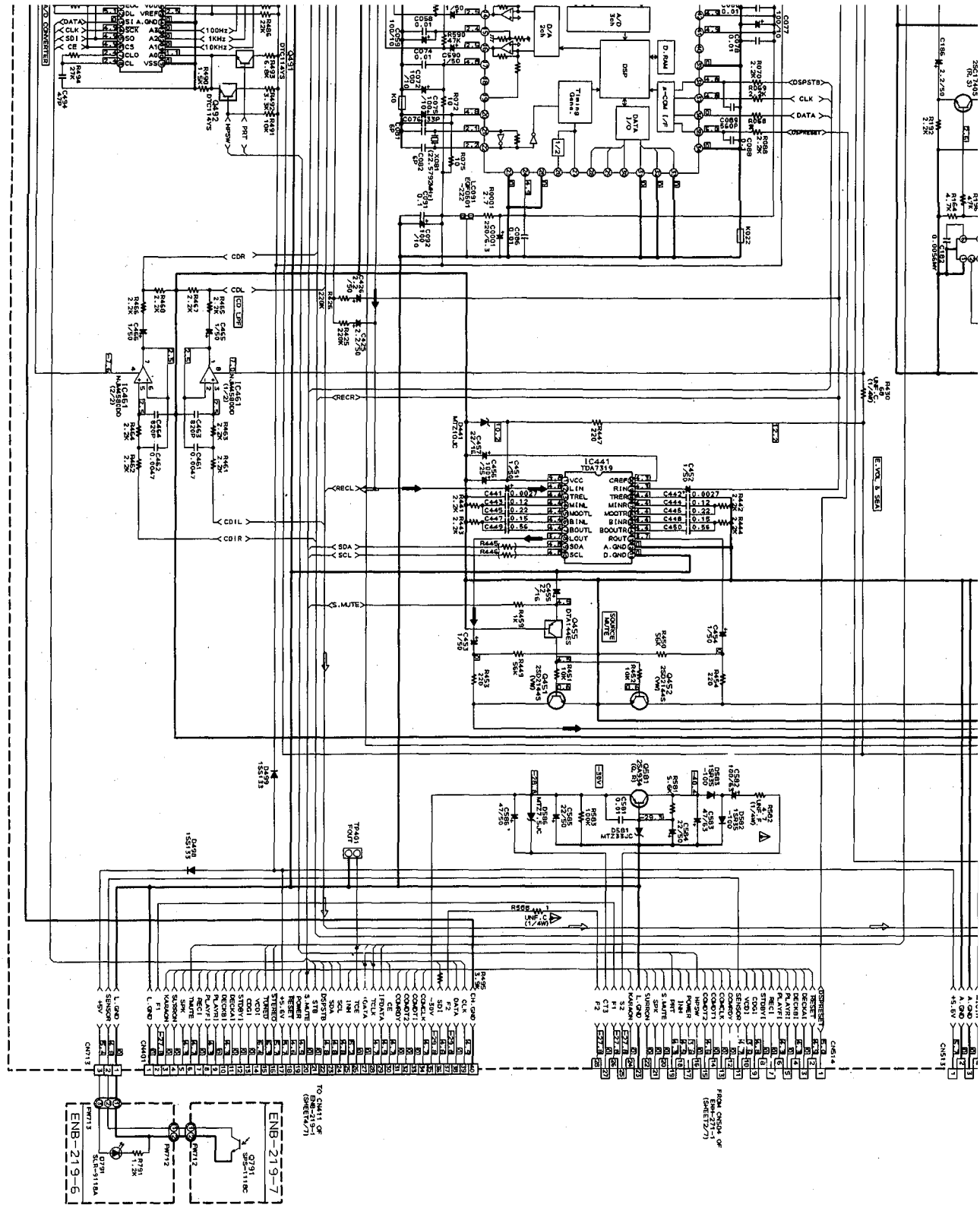

A/D CONVERTER
D/A 2ch
A/D 3ch
DSP
D.RAM
Timing Gene.
DATA I/O
μ-COM I/F
DSPSTB
CLK
DATA
DSPRESET
CDR
CDL
RECR
RECL
CDIL
CDIR
SDA
SCL
S.MUTE
IC441
TDA7319
IC461
E.VOL & SEA
SOURCE MUTE
TO CN411 OF ENB-219-1 (SHEET4/7)
FROM CN504 OF ENB-219-1 (SHEET2/7)
ENB-219-6
ENB-219-7

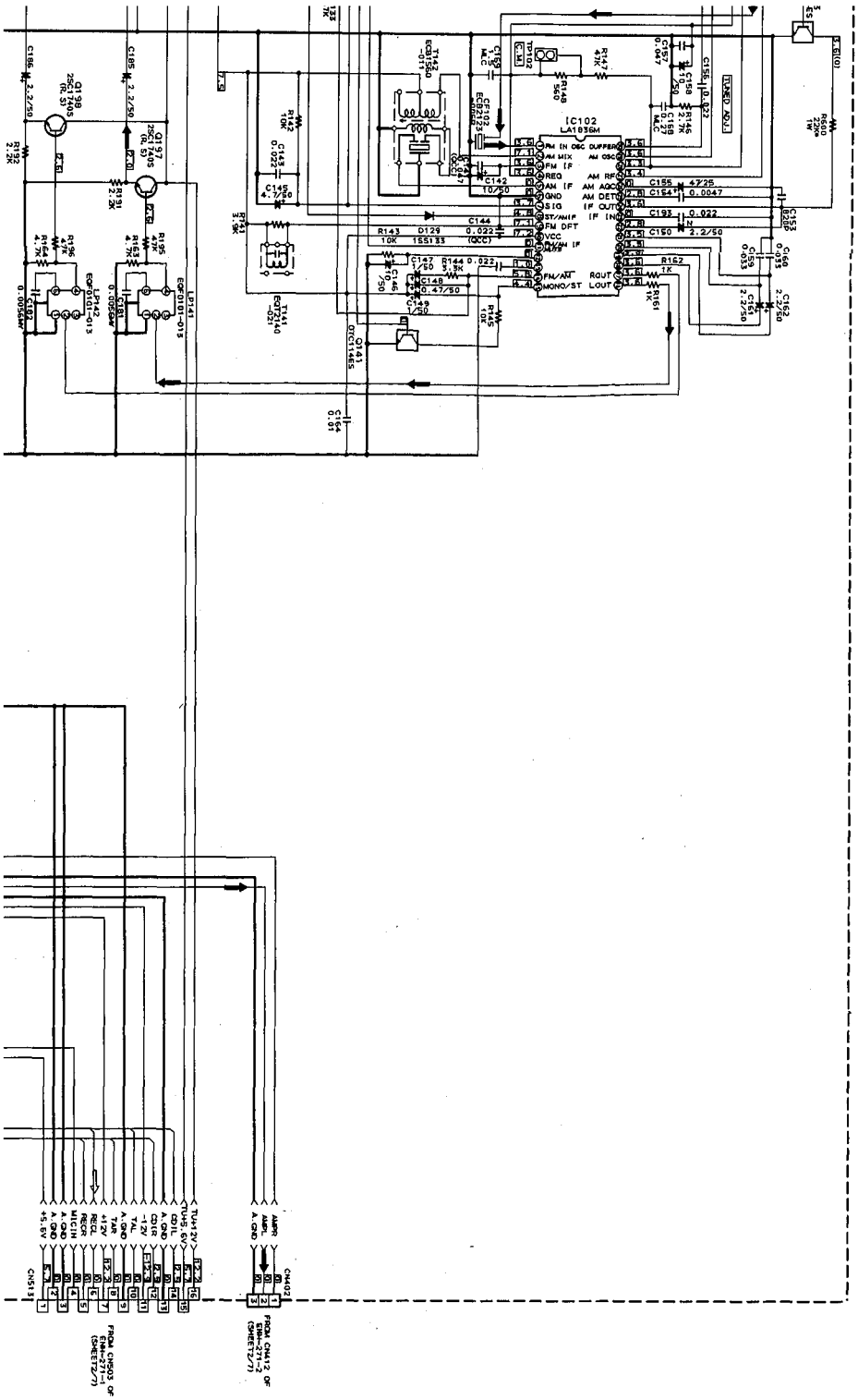
IC102
LA1836M
TUNED ADJ.
CN513
CN402
FROM CN503 OF ENM-271-1 (SHEET2/7)
FROM CN412 OF ENM-271-2 (SHEET2/7)

P2-45-a

P2-45-b

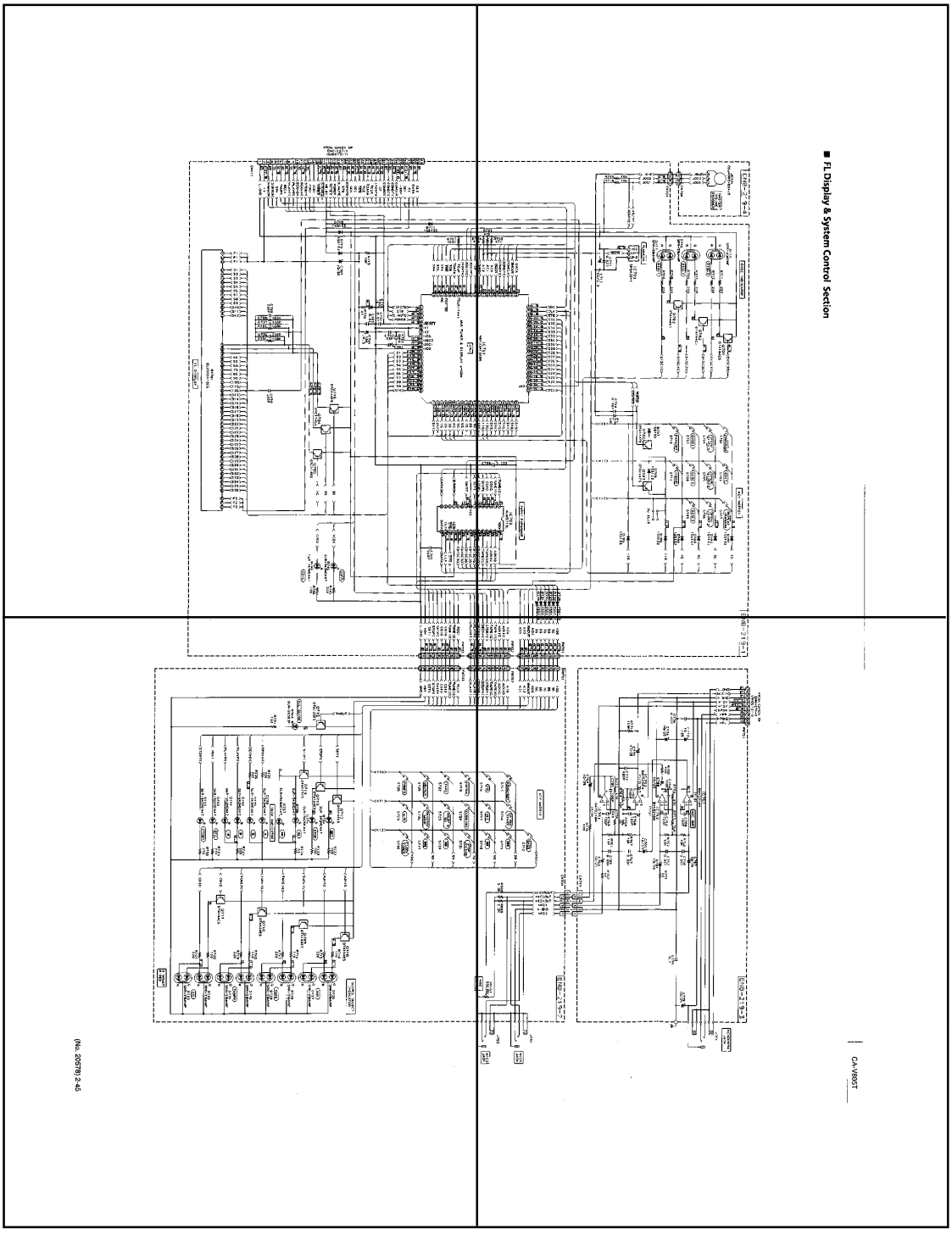

P2-45-c

P2-45-d

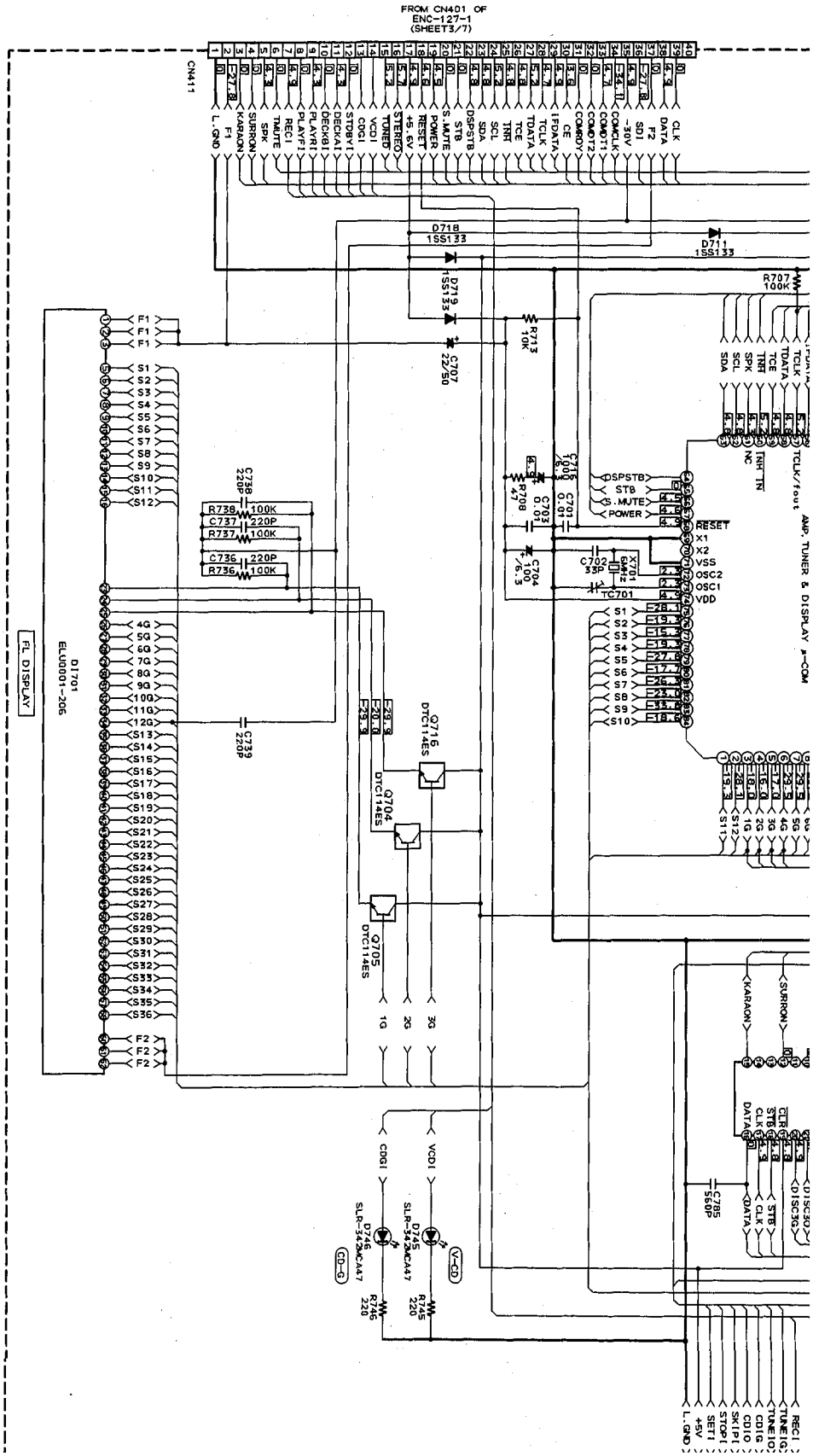
FROM CN401 OF ENC-127-1 (SHEET3/7)
CN411
D718 1SS133
D719 1SS133
D711 1SS133
R707 100K
R713 10K
C707 22/50
C715 100/6.3
C701 0.01
C703 0.01
R708 47
C704 100/6.3
C702 33P
X701 6MHz
TC701
RESET
X1
X2
VSS
OSC2
OSC1
VDD
C738 220P
R738 100K
C737 220P
R737 100K
C736 220P
R736 100K
C739 220P
DI701 ELU0001-206
FL DISPLAY
Q716 DTC114ES
Q704 DTC114ES
Q705 DTC114ES
D746 SLR-343MCA47
D745 SLR-343MCA47
R746 220
R745 220
C785 560P
AMP, TUNER & DISPLAY µ-COM

■ FL Display & System Control Section

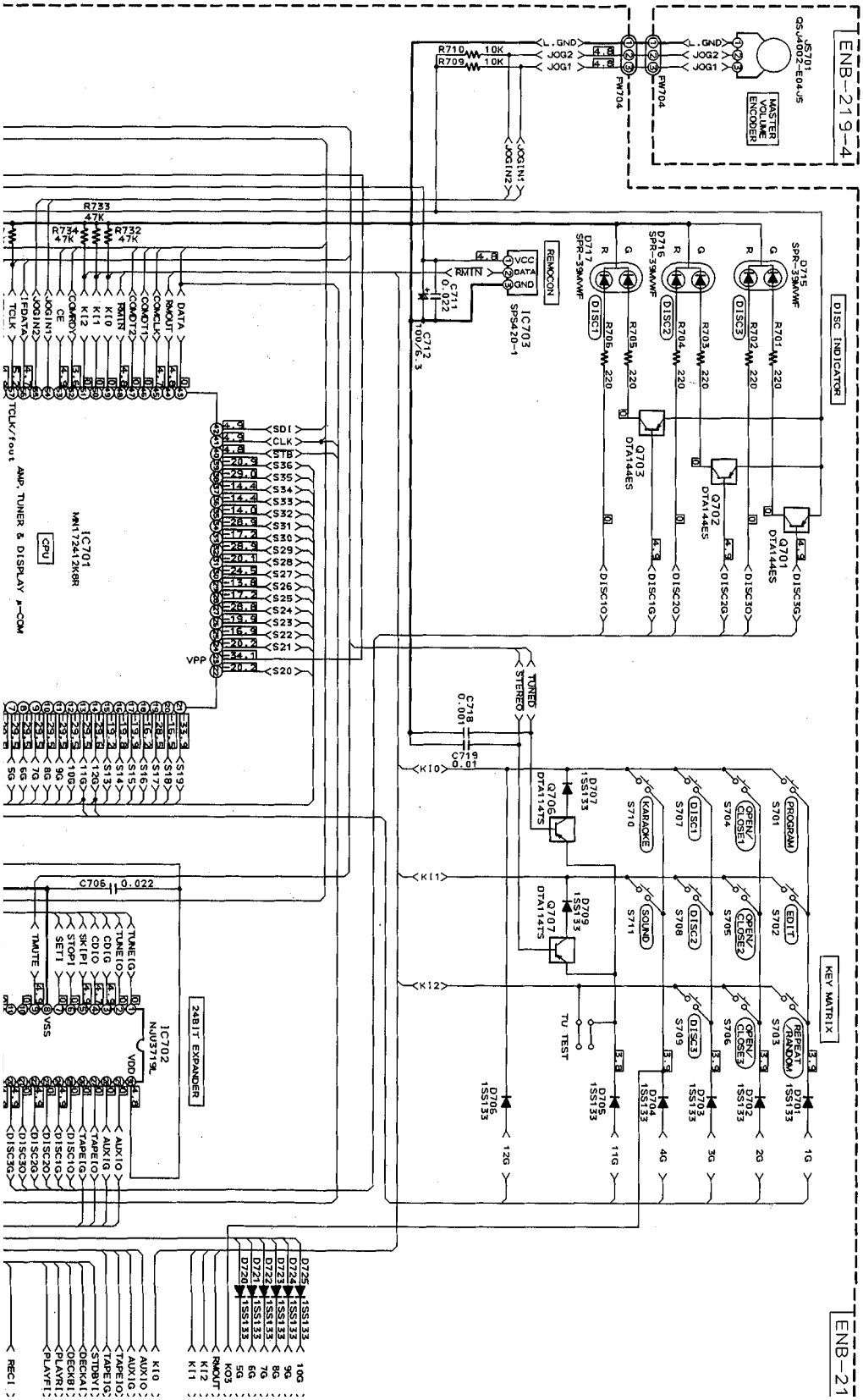

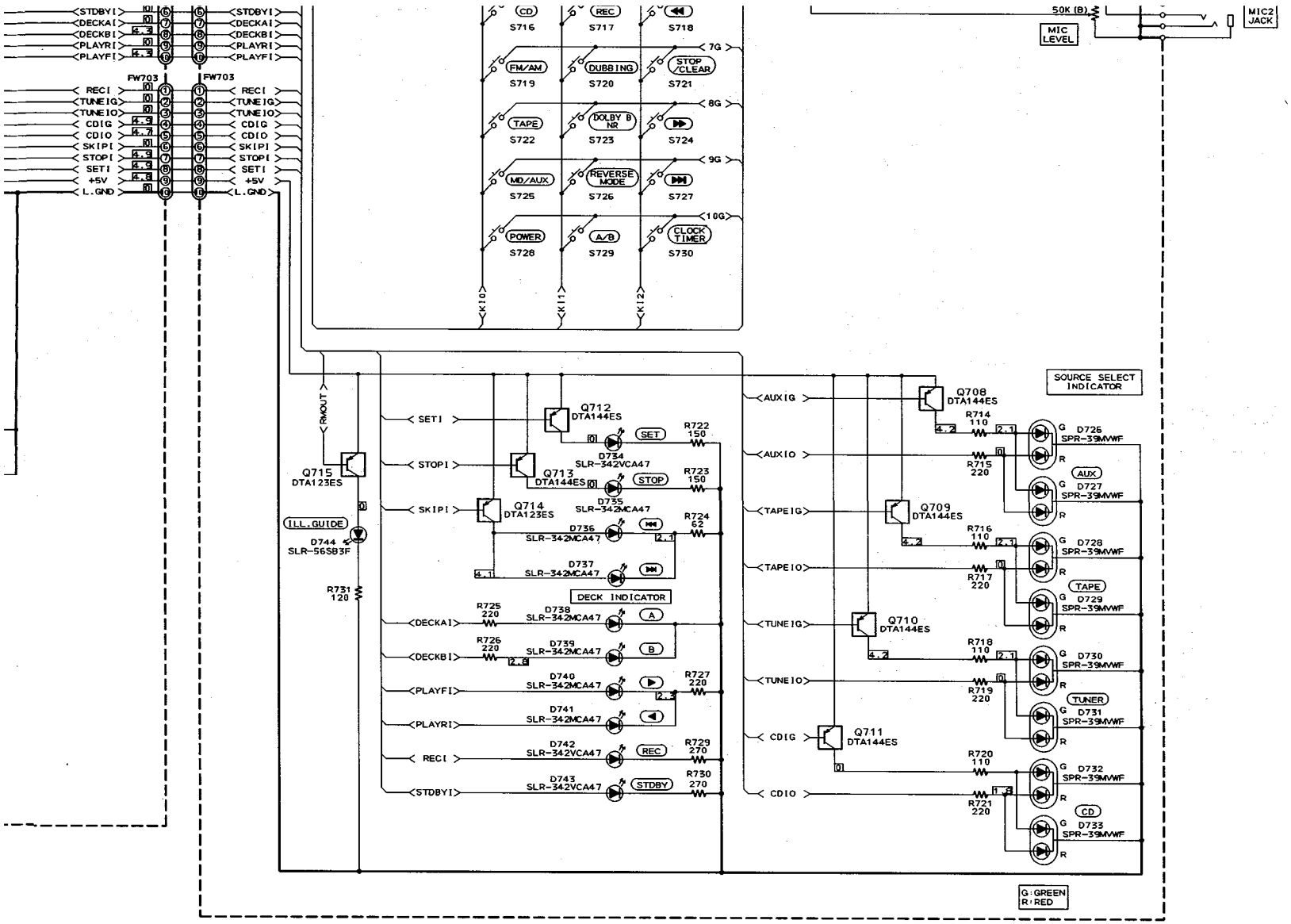
STDBYI
DECKAI
DECKBI
PLAYRI
PLAYFI
FW703
RECI
TUNEIG
TUNEIO
CDIG
CDIO
SKIPI
STOPI
SETI
+5V
L.GND
CD
REC
S716
S717
S718
7G
FM/AM
DUBBING
STOP/CLEAR
S719
S720
S721
8G
TAPE
DOLBY B NR
S722
S723
S724
9G
MD/AUX
REVERSE MODE
S725
S726
S727
10G
POWER
A/B
CLOCK TIMER
S728
S729
S730
K10
K11
K12
50K (B)
MIC LEVEL
MIC2 JACK
RMOUT
Q715 DTA123ES
ILL.GUIDE
D744 SLR-56SB3F
R731 120
Q712 DTA144ES
Q713 DTA144ES
Q714 DTA123ES
D734 SLR-342VCA47
D735 SLR-342MCA47
D736 SLR-342MCA47
D737 SLR-342MCA47
R722 150
R723 150
R724 62
SET
STOP
DECK INDICATOR
R725 220
R726 220
D738 SLR-342MCA47
D739 SLR-342MCA47
A
B
D740 SLR-342MCA47
D741 SLR-342MCA47
R727 220
D742 SLR-342VCA47
D743 SLR-342VCA47
R729 270
R730 270
REC
STDBY
AUXIG
AUXIO
TAPEIG
TAPEIO
TUNEIG
TUNEIO
CDIG
CDIO
Q708 DTA144ES
Q709 DTA144ES
Q710 DTA144ES
Q711 DTA144ES
SOURCE SELECT INDICATOR
R714 110
R715 220
R716 110
R717 220
R718 110
R719 220
R720 110
R721 220
D726 SPR-39MVWF
D727 SPR-39MVWF
D728 SPR-39MVWF
D729 SPR-39MVWF
D730 SPR-39MVWF
D731 SPR-39MVWF
D732 SPR-39MVWF
D733 SPR-39MVWF
AUX
TAPE
TUNER
CD
G
R
G:GREEN
R:RED

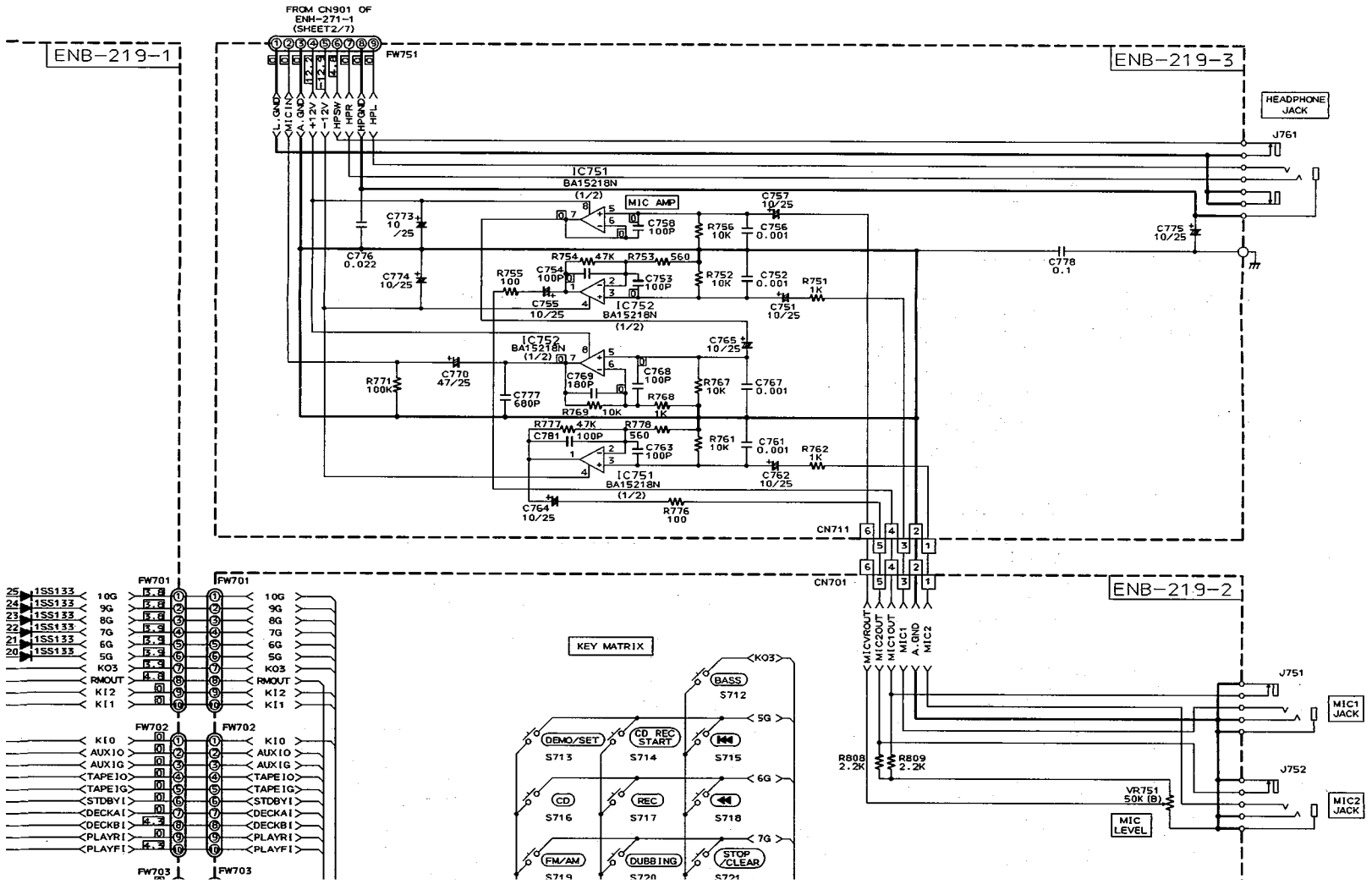
FROM CN901 OF ENH-271-1 (SHEET2/7)
FW751
L.GND
MIC1IN
A.GND
+12V
-12V
HPSW
HPR
HPGND
HPL
ENB-219-1
ENB-219-3
ENB-219-2
HEADPHONE JACK
J761
IC751 BA15218N (1/2)
MIC AMP
IC752 BA15218N (1/2)
C773 10/25
C774 10/25
C775 10/25
C776 0.022
C778 0.1
C751 10/25
C752 0.001
C753 100P
C754 100P
C755 10/25
C756 0.001
C757 10/25
C758 100P
C761 0.001
C762 10/25
C763 100P
C764 10/25
C765 10/25
C767 0.001
C768 100P
C769 180P
C770 47/25
C777 680P
C781 100P
R751 1K
R752 10K
R753 560
R754 47K
R755 100
R756 10K
R761 10K
R762 1K
R767 10K
R768 1K
R769 10K
R771 100K
R776 100
R777 47K
R778 560
CN711
CN701
MICCVROUT
MICCOUT
MICTOUT
MIC1
A.GND
MIC2
J751
MIC1 JACK
J752
MIC2 JACK
R808 2.2K
R809 2.2K
VR751 50K (B)
MIC LEVEL
FW701
FW702
FW703
1SS133
10G
9G
8G
7G
6G
5G
KO3
RMOUT
KI2
KI1
KI0
AUXIO
AUXIG
TAPEIO
TAPEIG
STDBYI
DECKAI
DECKBI
PLAYRI
PLAYFI
KEY MATRIX
BASS S712
DEMO/SET S713
CD REC START S714
S715
CD S716
REC S717
S718
FM/AM S719
DUBBING S720
STOP /CLEAR S721

P2-46-a P2-46-b

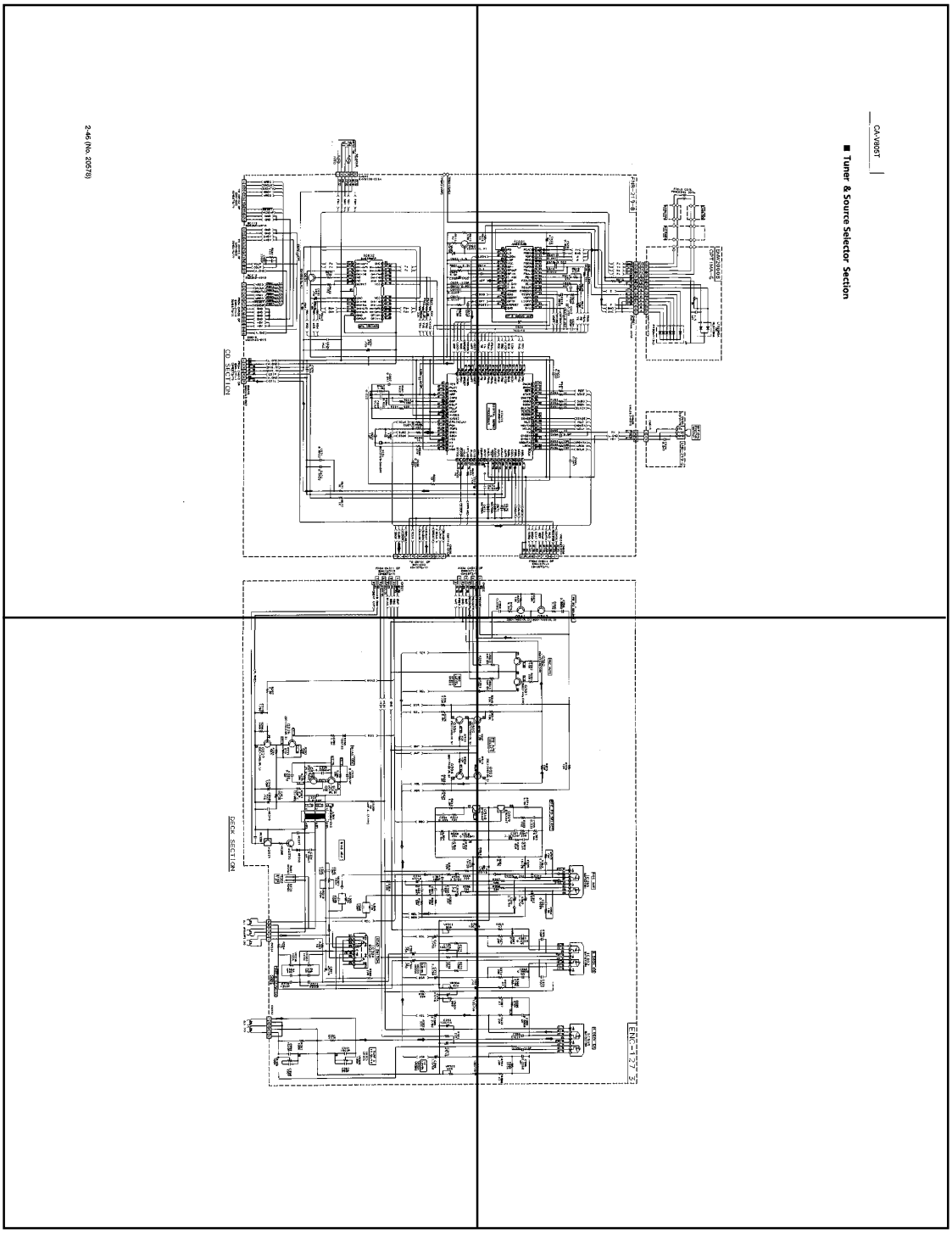

P2-46-c P2-46-d

2-46 (No. 20578)

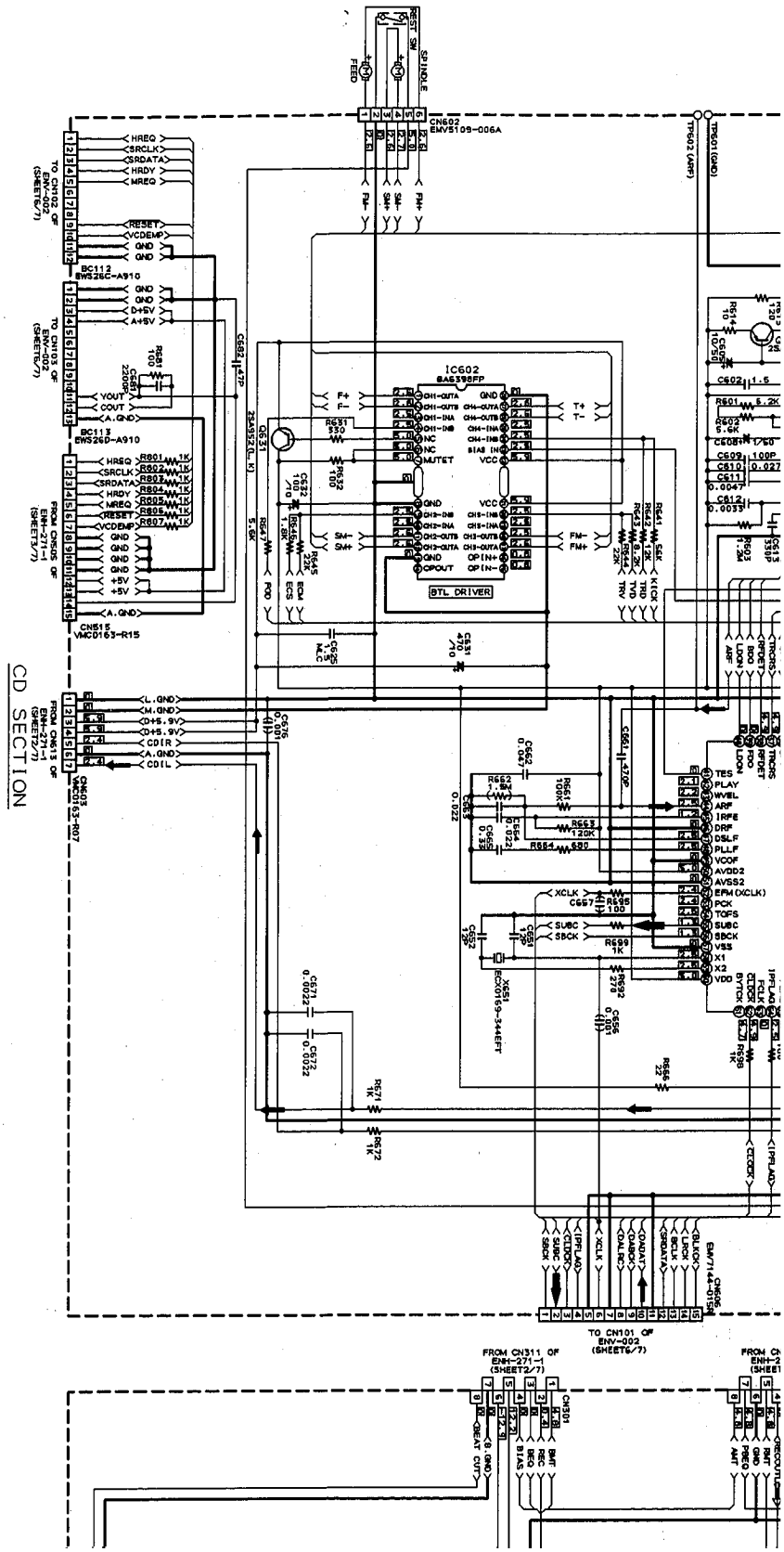
CD SECTION
IC602
BA6398FP
BTL DRIVER
CN602
EMV5109-006A
CN515
VMC0163-R15
CN603
VMC0163-R07
CN606
EMV7144-015R
CN301
TO CN101 OF
ENV-002
(SHEET6/7)
FROM CN311 OF
ENH-271-1
(SHEET2/7)
FROM CN513 OF
ENH-271-1
(SHEET2/7)
FROM CN505 OF
ENH-271-1
(SHEET3/7)
TO CN102 OF
ENV-002
(SHEET6/7)
TO CN103 OF
ENV-002
(SHEET6/7)
BC112
EWS26C-A910
BC113
EWS26D-A910
TP601 (GND)
TP602 (ARF)
SPINDLE
FEED
REST SW
TES
PLAY
WVEL
ARF
IRFE
DRF
DSLF
PLLF
VCOF
AVDD2
AVSS2
EFM (XCLK)
PCK
TOFS
SUBC
SBCK
VSS
X1
X2
VDD
XCLK
SUBC
SBCK
CLOCK
IPFLAG
BLKCK
LRCK
SRDATA
BCLK
DADAT
DABCK
DALRC
XCLK
CLOCK
IPFLAG
SUBC
SBCK
BEAT CUT
BIAS
REC
BMT
PBEQ
AMT
RECOUTLOW
RMT
GND
PBEQ
AMT

■ Tuner & Source Selector Section

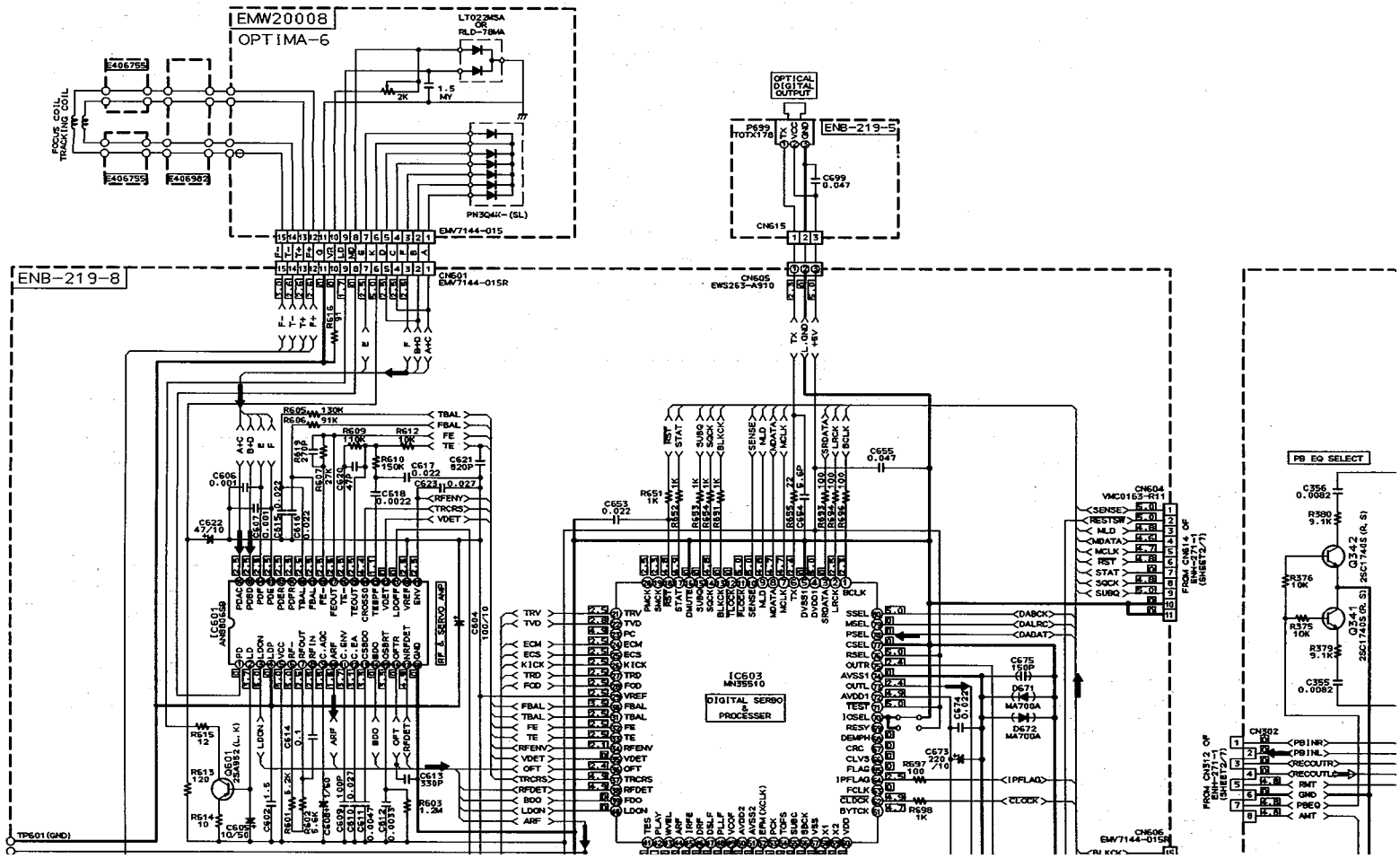

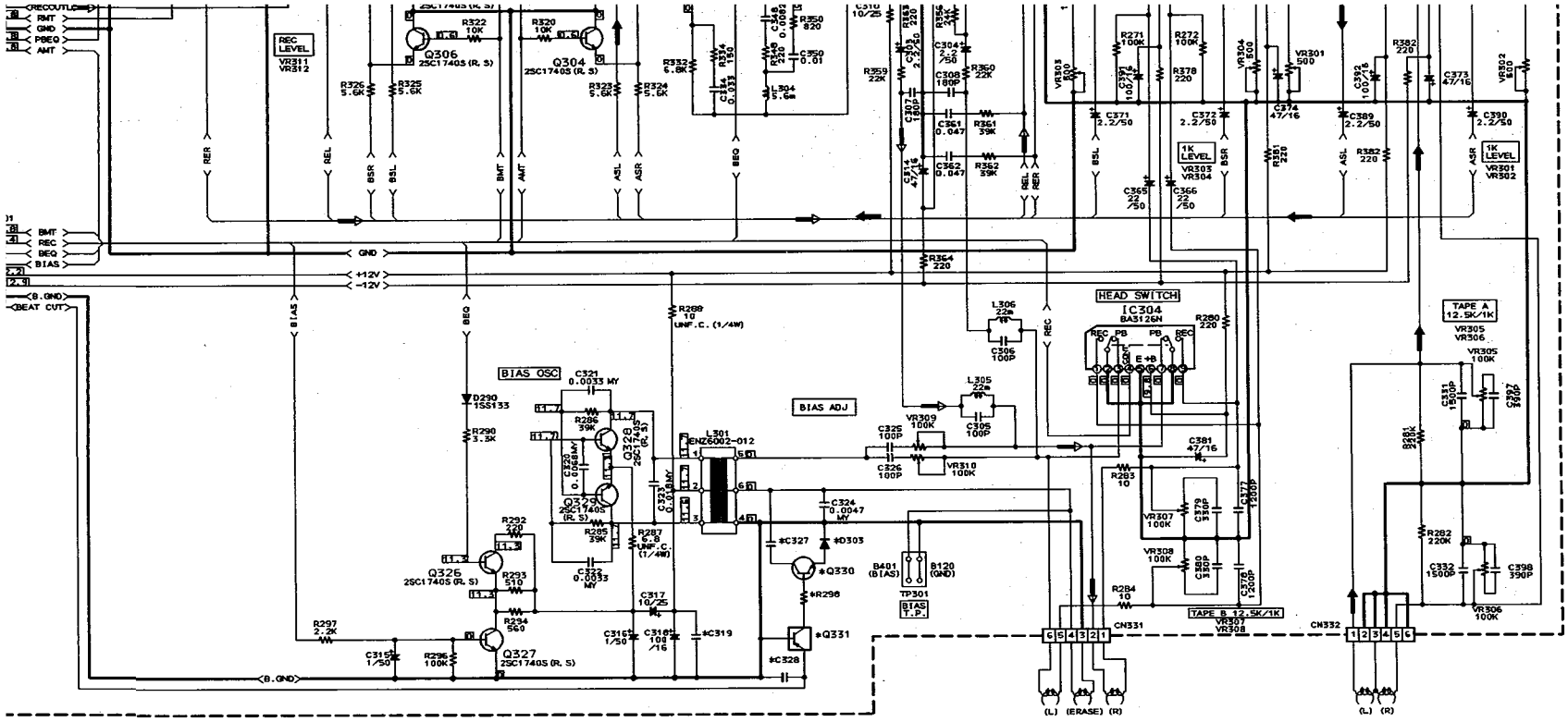

DECK SECTION

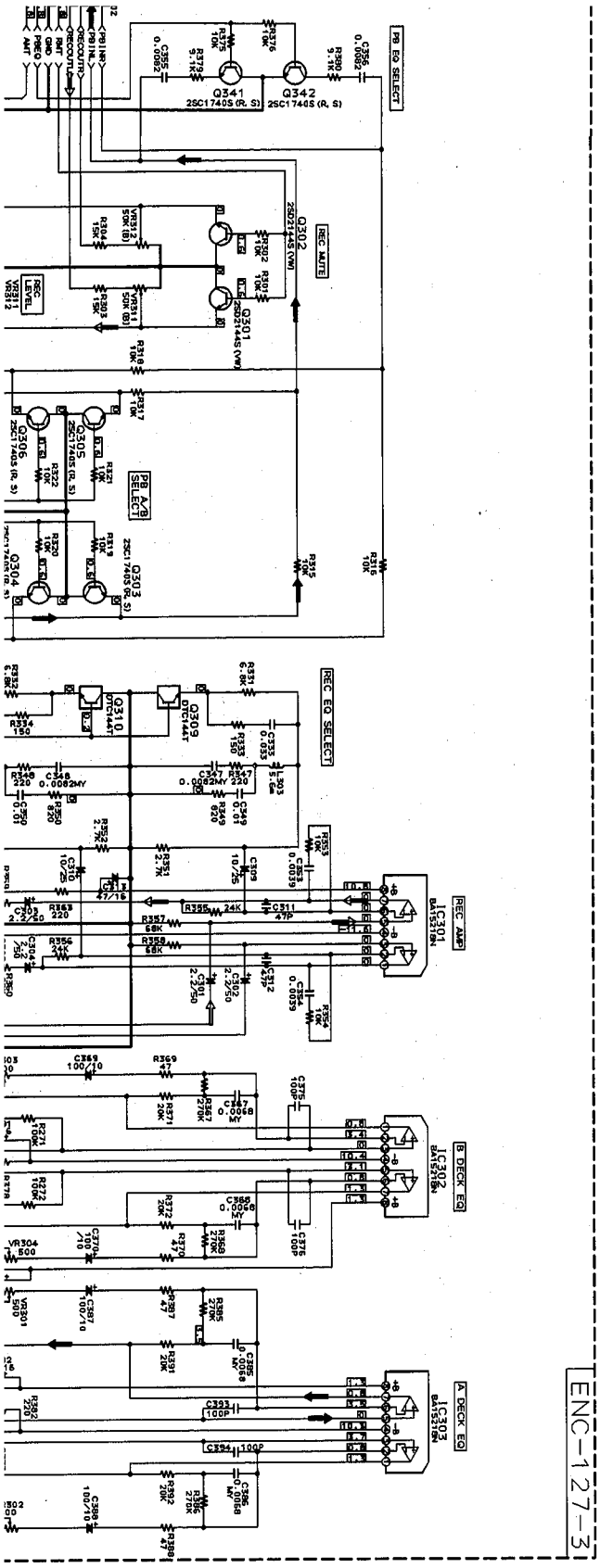
PB EQ SELECT
Q341
2SC1740S (R, S)
Q342
2SC1740S (R, S)
REC MUTE
Q302
2SD2144S (VW)
Q501
2SD2144S (VW)
REC LEVEL
PB A/B SELECT
Q306
Q305
Q304
Q303
REC EQ SELECT
Q310
DTC144T
Q309
DTC144T
REC AMP
IC301
BA15218N
B DECK EQ
IC302
BA15218N
A DECK EQ
IC303
BA15218N
ENC-127-3

P2-47-a

P2-47-b

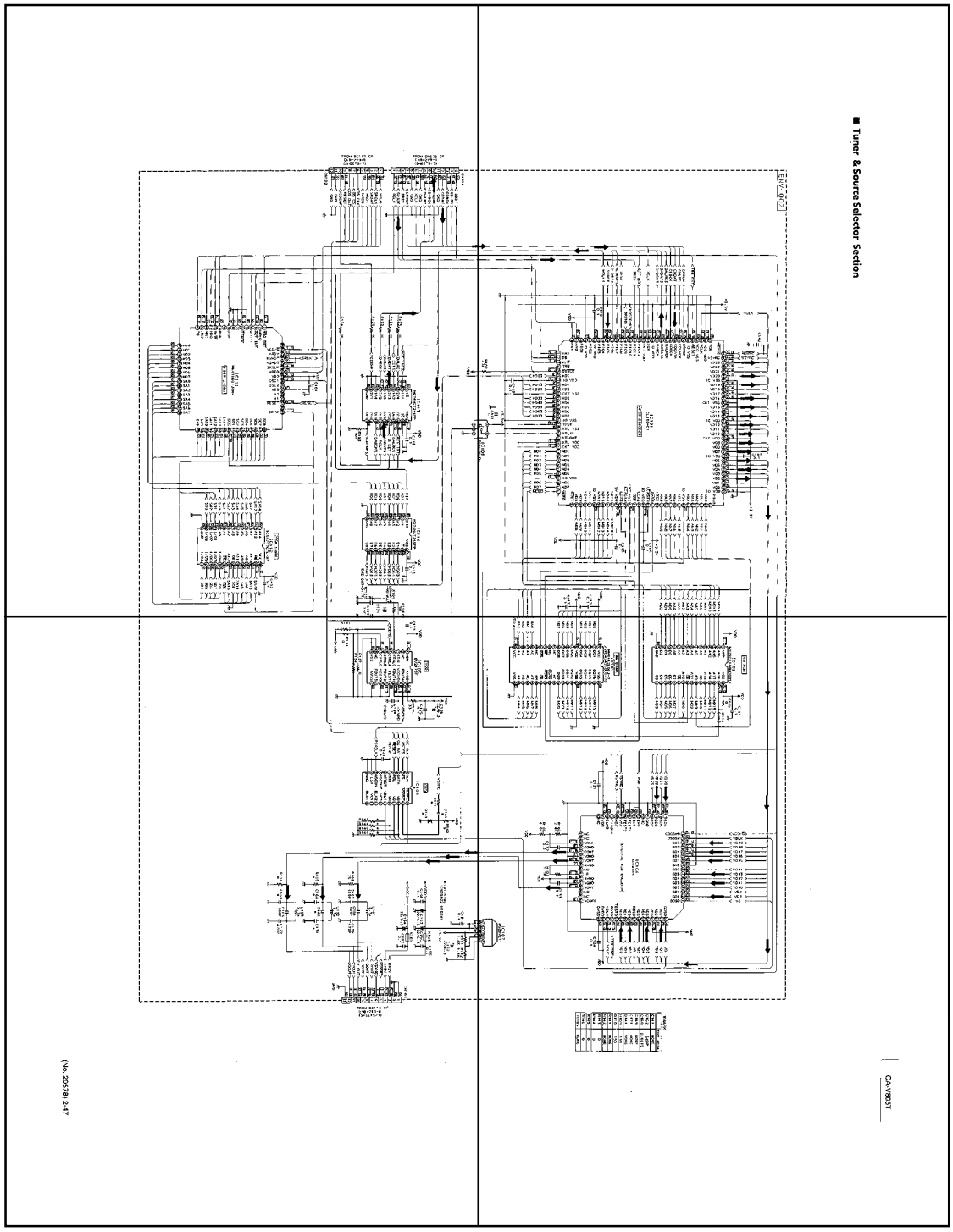

P2-47-c

P2-47-d

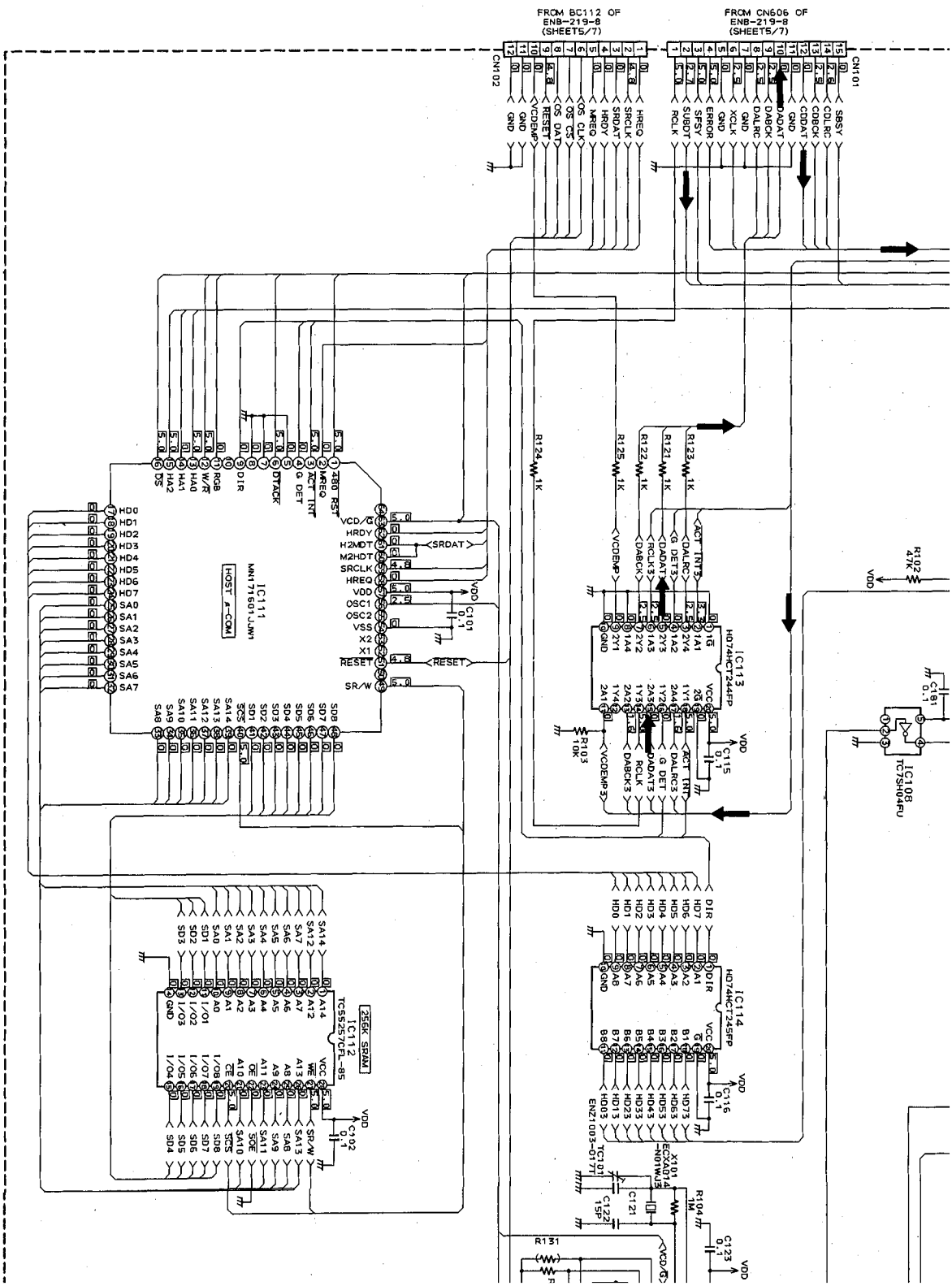
FROM BC112 OF
ENB-219-8
(SHEET5/7)
FROM CN606 OF
ENB-219-8
(SHEET5/7)
CN102
CN101
IC111
MN171601JJW1
HOST μ-COM
IC112
TC55257CFL-85
256K SRAM
IC113
HD74HCT244FP
IC114
HD74HCT245FP
IC108
TC7SH04FU
R102
47K
R103
10K
R104
1M
R131
C101
0.1
C102
0.1
C115
0.1
C116
0.1
C121
C122
15P
C123
0.1
C181
0.1
X101
ECXA014
-N01WJ3
TC101
ENZ1003-017T
VDD
SRDAT
RESET

■ Tuner & Source Selector Section

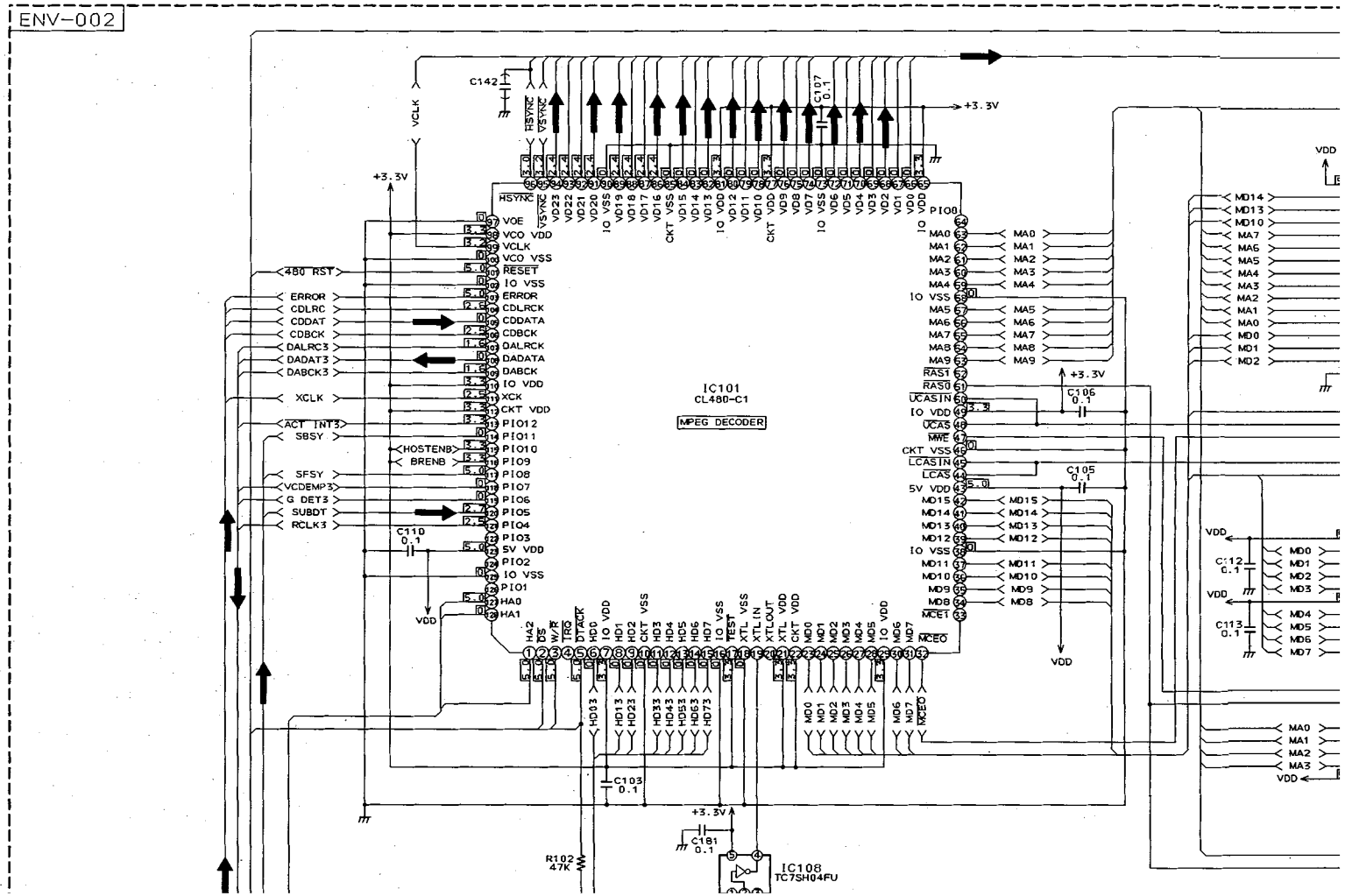

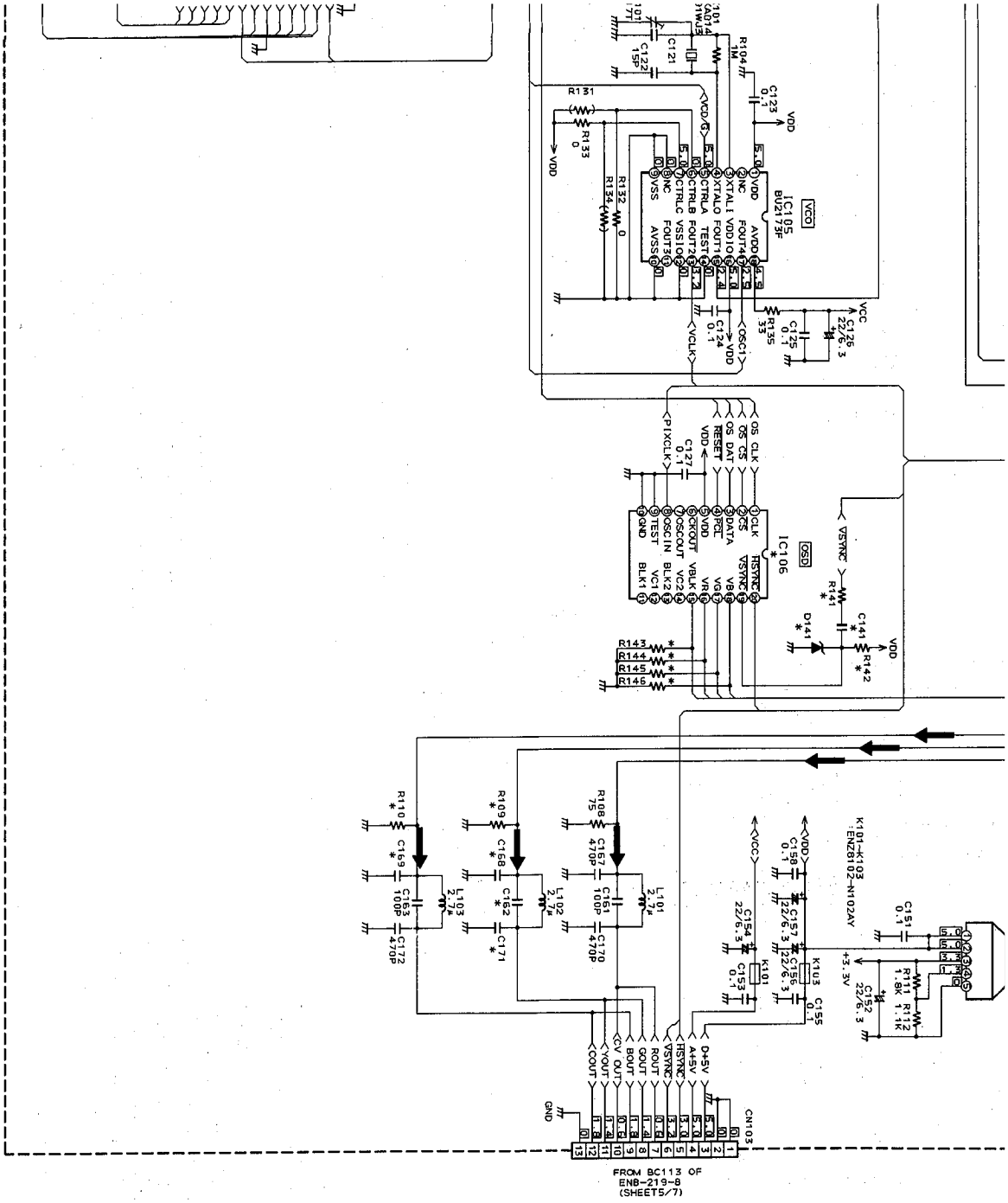
IC105
BU2173F
VCO
IC106
OSD
K101-K103
ENZ8102-N102AY
CN103
FROM BC113 OF
ENB-219-8
(SHEET5/7)

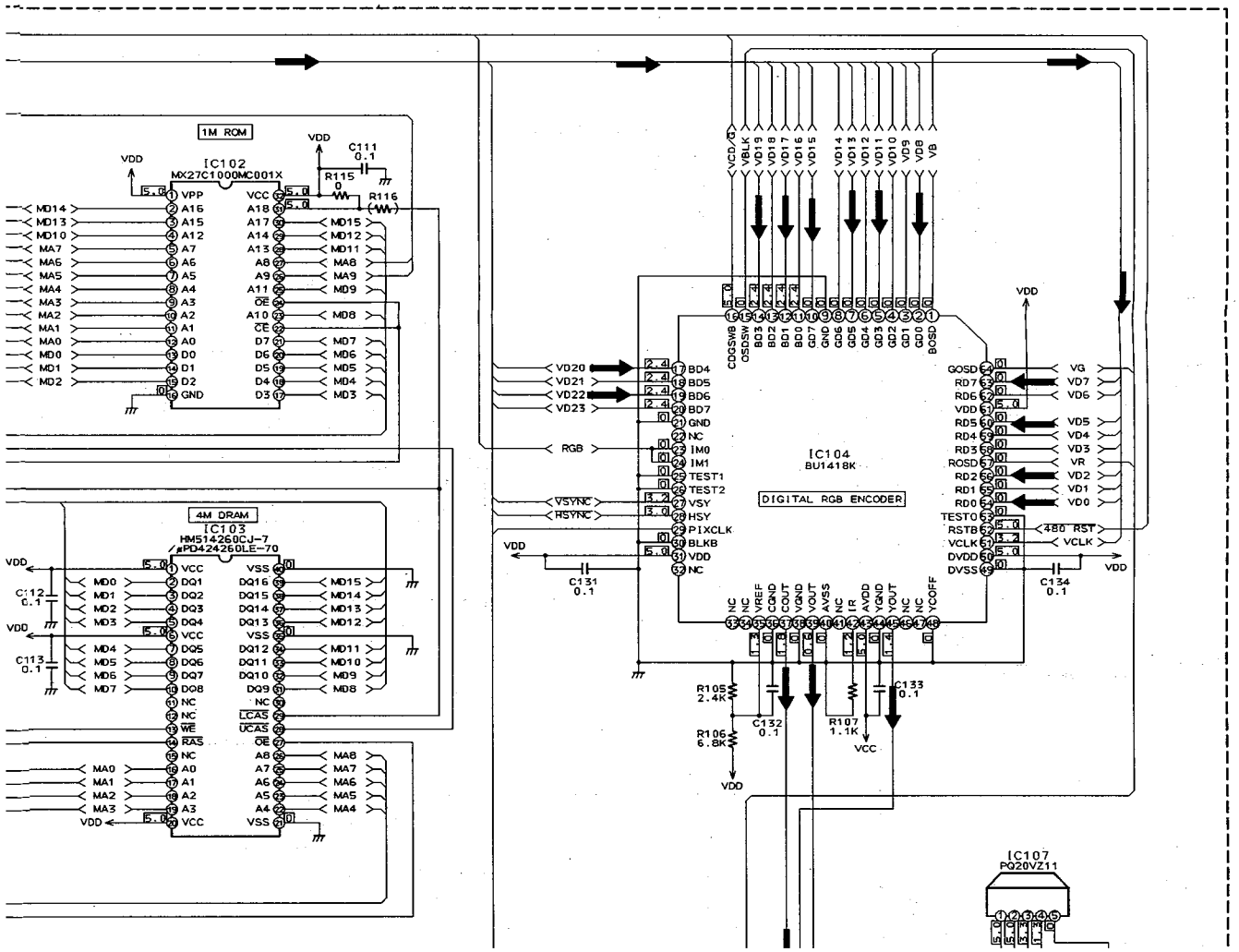

*MARK

	ENV-002A
C141	NONE
C162	680P
C168	0.0015
C169	NONE
C171	NONE
D141	NONE
R109	110
R110	150
R141	NONE
R142	NONE
R143	0
R144	0
R145	0
R146	0
IC106	NONE

P2-48-a P2-48-b

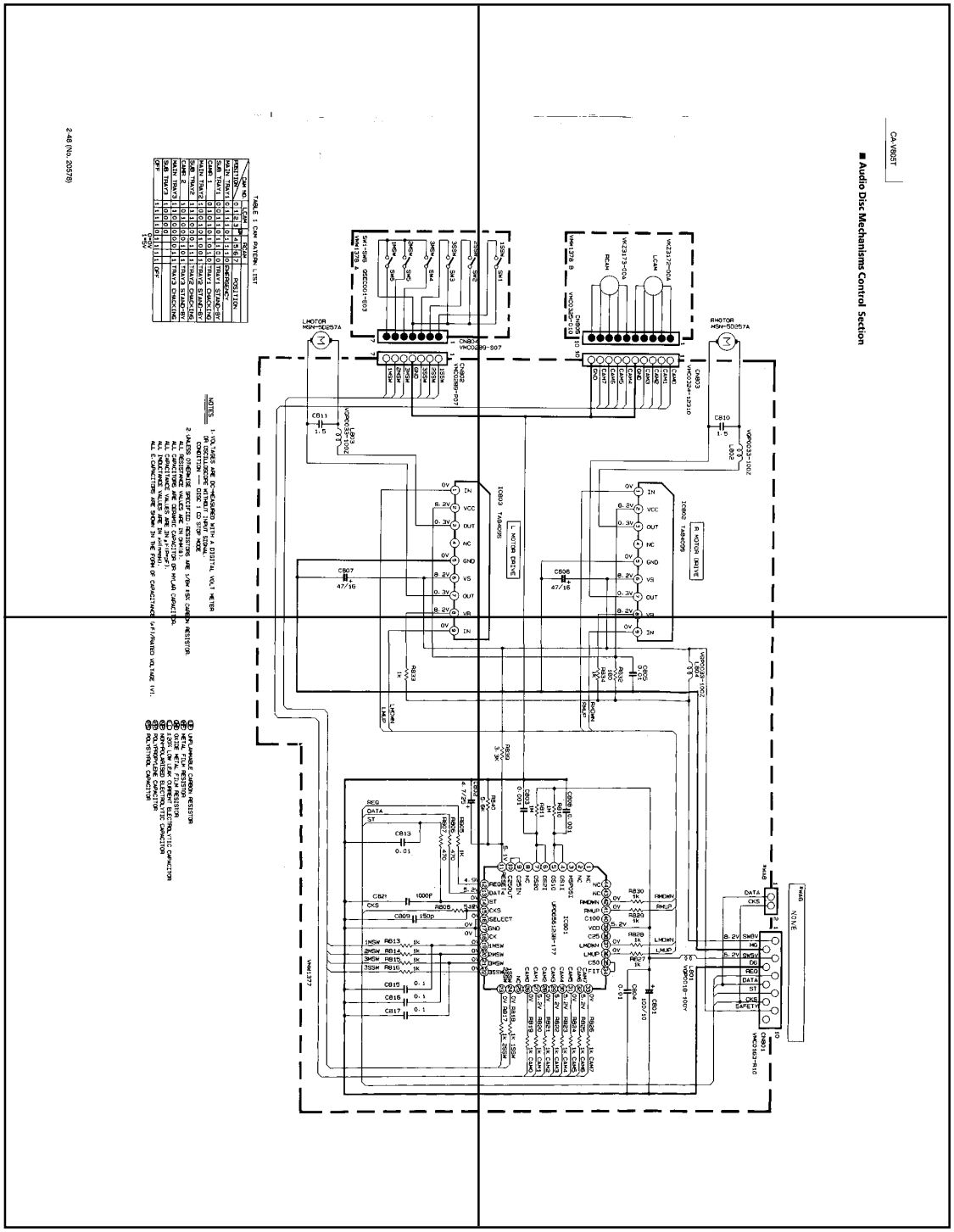
■ Audio Dist Mechanisms Control Section
CA-V802ST
2-48 (No. 20578)
TABLE 1 KEY PATTERN LIST
NOTES
LMOTOR MSM-50257A
RMOTOR MSM-50257A
CN804 VHC0289-907
CN802 VHC0289-P07
CN803 VHC0289-P07
CN801 VHC0289-P07
VHC2317-700
VHC2317-P00
VHC0289-P07
VHC0289-P07
VHC0289-P07

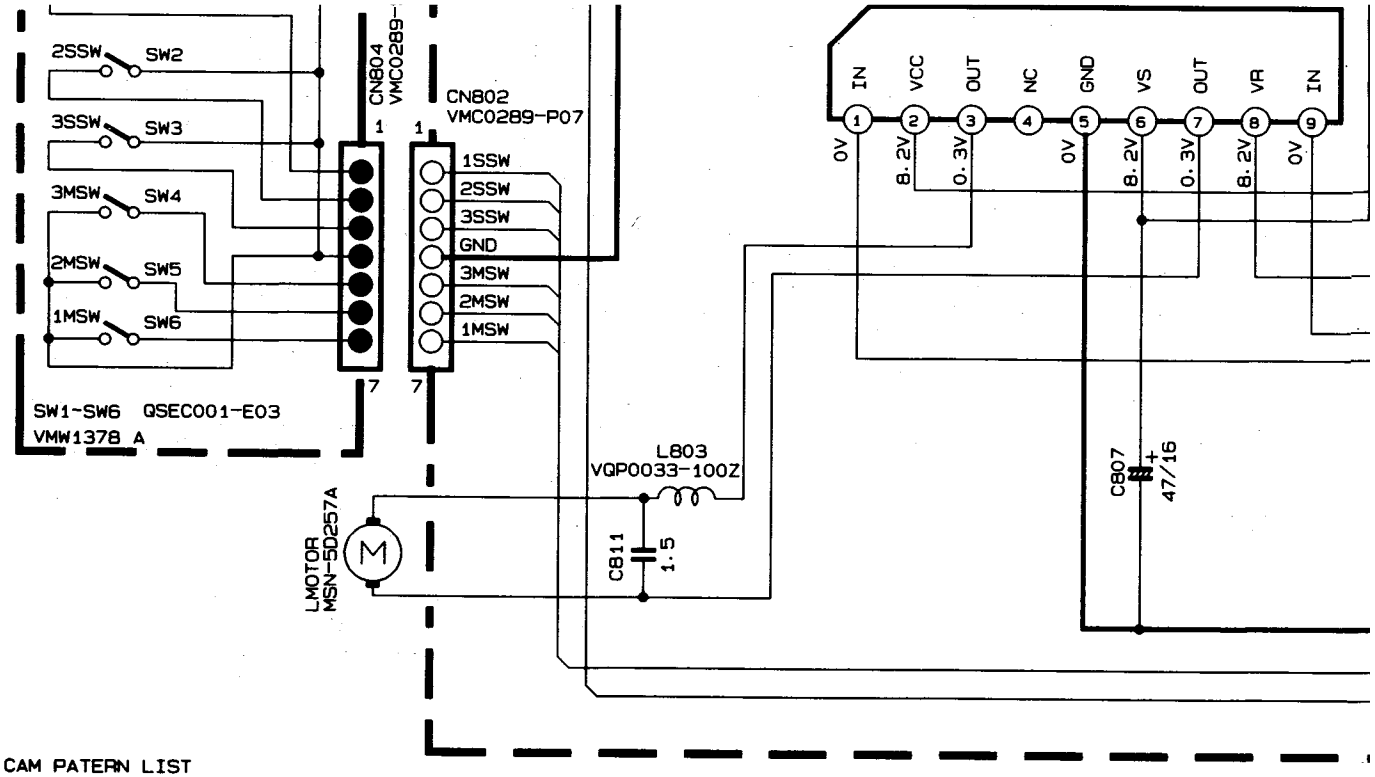

TABLE 1 CAM PATERN LIST

CAM NO. / POSITION	LCAM 0	1	2	3	ON	RCAM 4	5	6	7	POSITION
MAIN TRAY1	0	1	1	1	0	1	1	1	0	EMERGENCY
SUB TRAY1	0	0	1	1	0	1	1	0	0	TRAY1 STAND-BY
CAMR 1	0	1	0	1	0	1	0	1	0	TRAY1 CHACKING
MAIN TRAY2	1	0	0	1	0	1	0	0	1	TRAY2 STAND-BY
SUB TRAY2	1	1	1	0	0	0	1	1	1	TRAY2 CHACKING
CAMR 2	1	0	1	0	0	0	1	0	1	TRAY3 STAND-BY
MAIN TRAY3	1	1	0	0	0	0	0	1	1	TRAY3 CHACKING
SUB TRAY3	1	0	0	0	0					
OFF	1	1	1	1	0	1	1	1	1	OFF

0=0V
1=5V

NOTES

1. VOLTAGES ARE DC-MEASURED WITH A DIGITAL VOLT METER OR OSCILLOSCOPE WITHOUT INPUT SIGNAL.
   CONDITION --- DISC 1 CD STOP MODE
2. UNLESS OTHERWISE SPECIFIED ·RESISTORS ARE 1/6W ±5% CARBON RESIST(
   ALL RESISTANCE VALUES ARE IN OHM(Ω).
   ALL CAPACITORS ARE CERAMIC CAPACITOR OR MYLAR CAPACITOR.
   ALL CAPACITANCE VALUES ARE IN μF(P=pF).
   ALL INDUCTANCE VALUES ARE IN μH(m=mH).
   ALL E.CAPACITORS ARE SHOWN IN THE FORM OF CAPACITANCE (μF)/RAT

■ Audio Disc Mechanisms Control Section

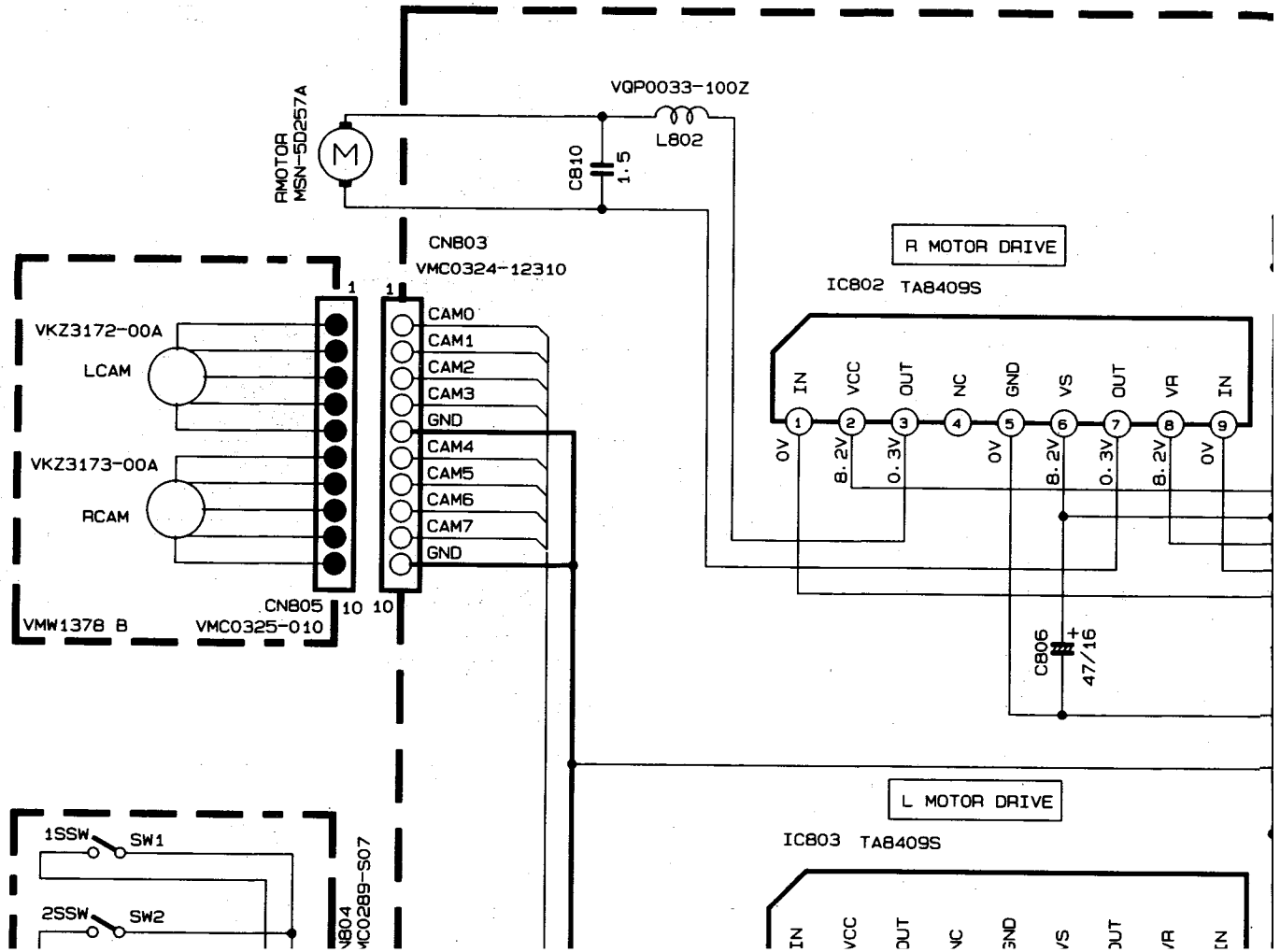

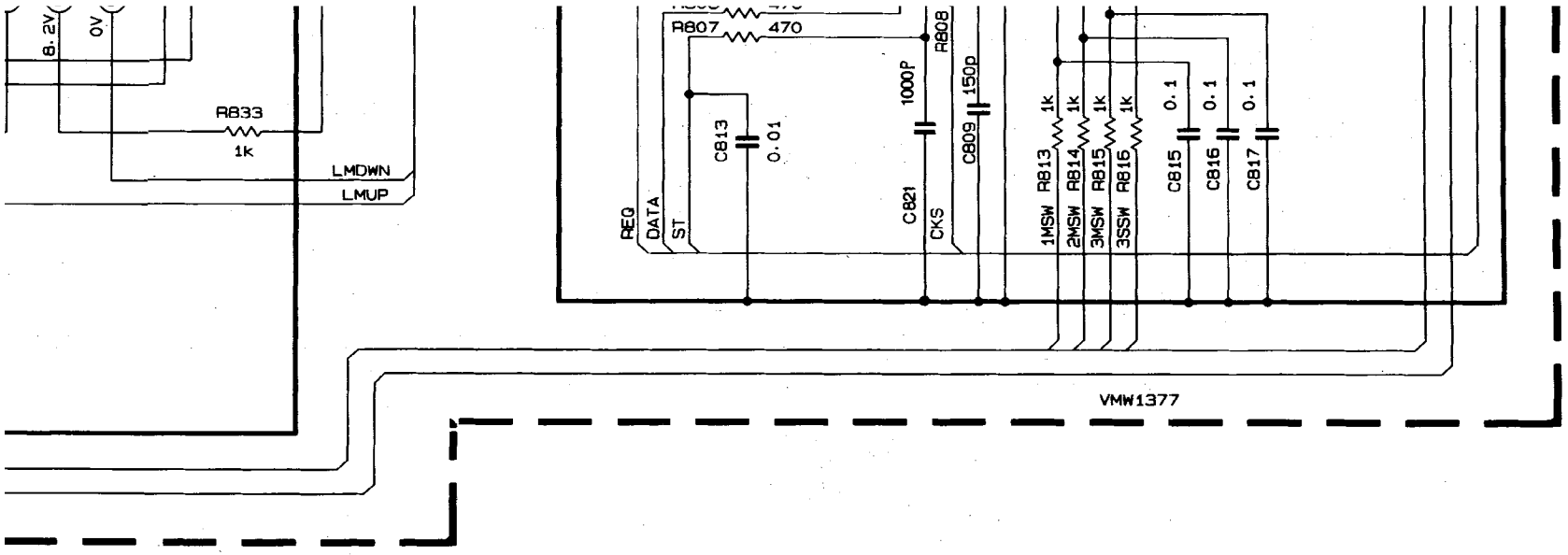

METER

5% CARBON RESISTOR.

CAPACITOR.

CITANCE (μF)/RATED VOLTAGE (V).

(UF) UNFLAMMABLE CARBON RESISTOR
(MF) METAL FILM RESISTOR
(OMF) OXIDE METAL FILM RESISTOR
(LL) ±20% LOW LEAK CURRENT ELECTROLYTIC CAPACITOR
(NP) NON-POLARISED ELECTROLYTIC CAPACITOR
(PP) POLYPROPYLENE CAPACITOR
(PS) POLYSTYROL CAPACITOR

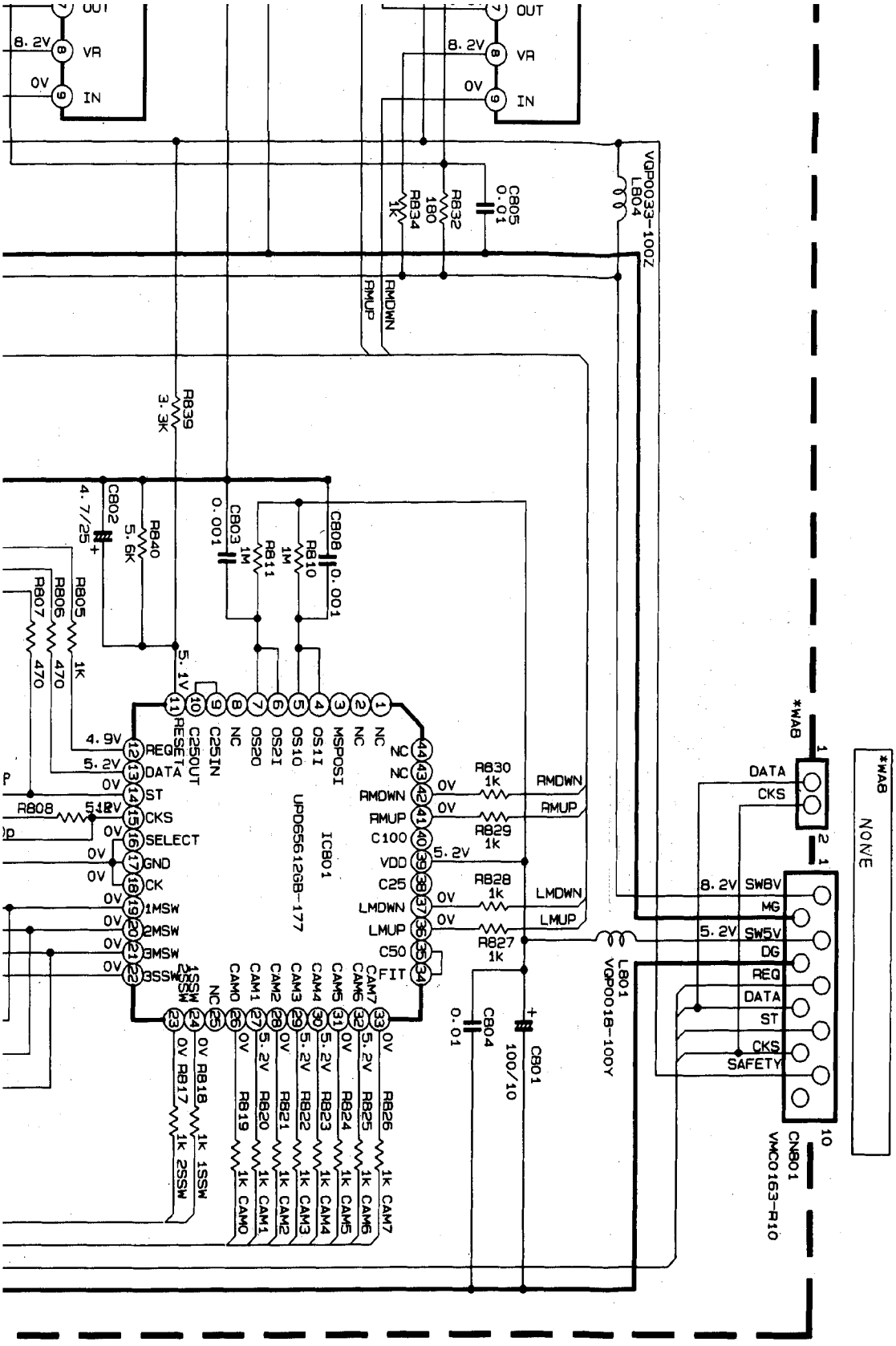
OUT
8.2V
VR
0V
IN
VQP0033-100Z
L804
C805
0.01
R832
180
R834
1K
RMDWN
RMUP
R839
3.3K
C802
4.7/25
R840
5.6K
C803
0.001
R811
1M
R810
1M
C808
0.001
R805
1K
R806
470
R807
470
5.1V
4.9V
5.2V
REQ
DATA
ST
CKS
SELECT
GND
CK
1MSW
2MSW
3MSW
3SSW
R808
C250UT
C25IN
NC
OS20
OS2I
OS10
OS1I
MSPOSI
IC801
UPD65612GB-177
RMDWN
RMUP
C100
VDD
C25
LMDWN
LMUP
C50
FIT
R830
1k
R829
1k
R828
1k
R827
1k
L801
VQP0018-100Y
C804
0.01
C801
100/10
R817
1k 2SSW
R818
1k 1SSW
R819
1k CAM0
R820
1k CAM1
R821
1k CAM2
R822
1k CAM3
R823
1k CAM4
R824
1k CAM5
R825
1k CAM6
R826
1k CAM7
*WAB
DATA
CKS
SW8V
MG
SW5V
DG
REQ
DATA
ST
CKS
SAFETY
CN801
VMC0163-R10
NONE

P2-49-a

P2-49-b

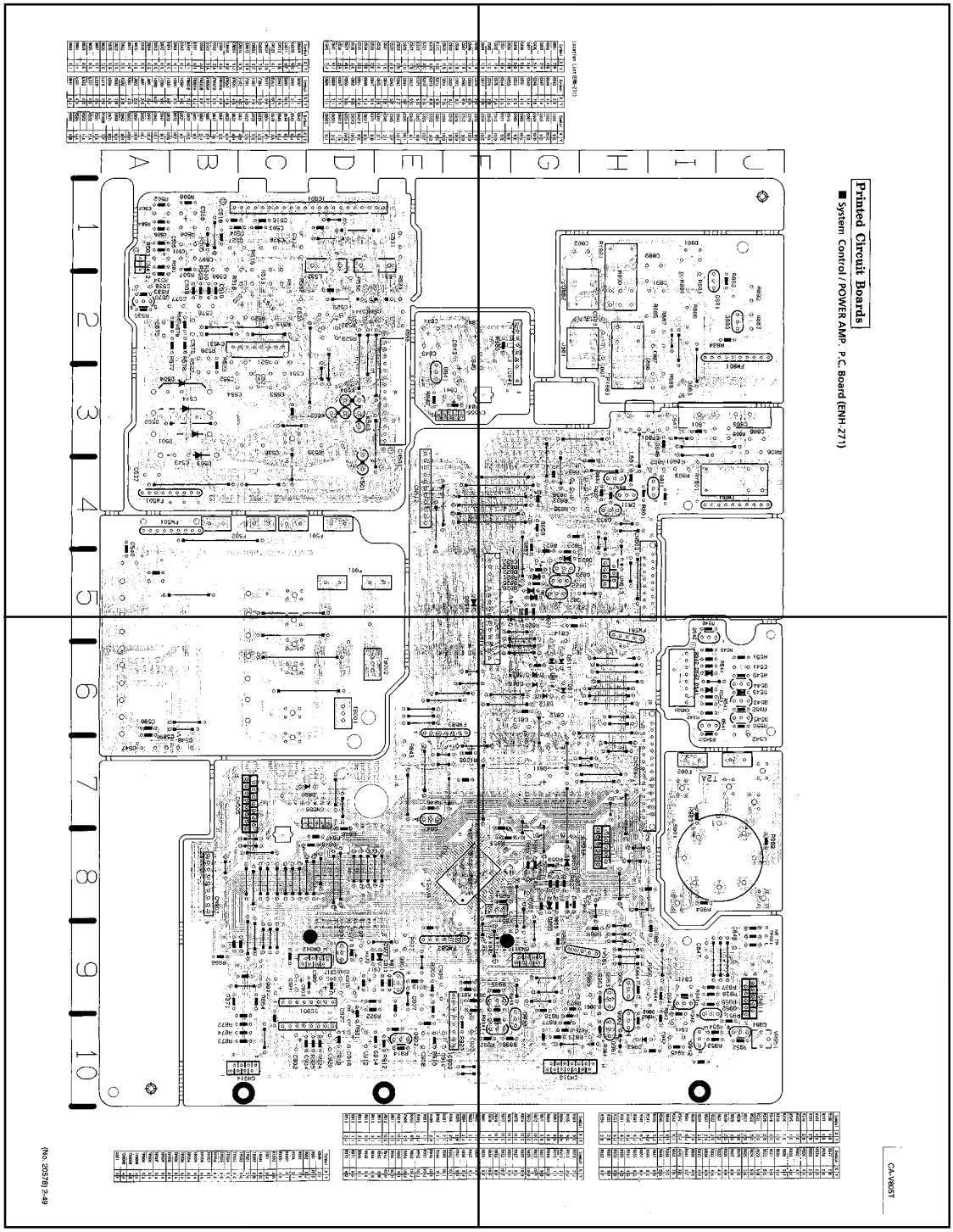

P2-49-c

P2-49-d

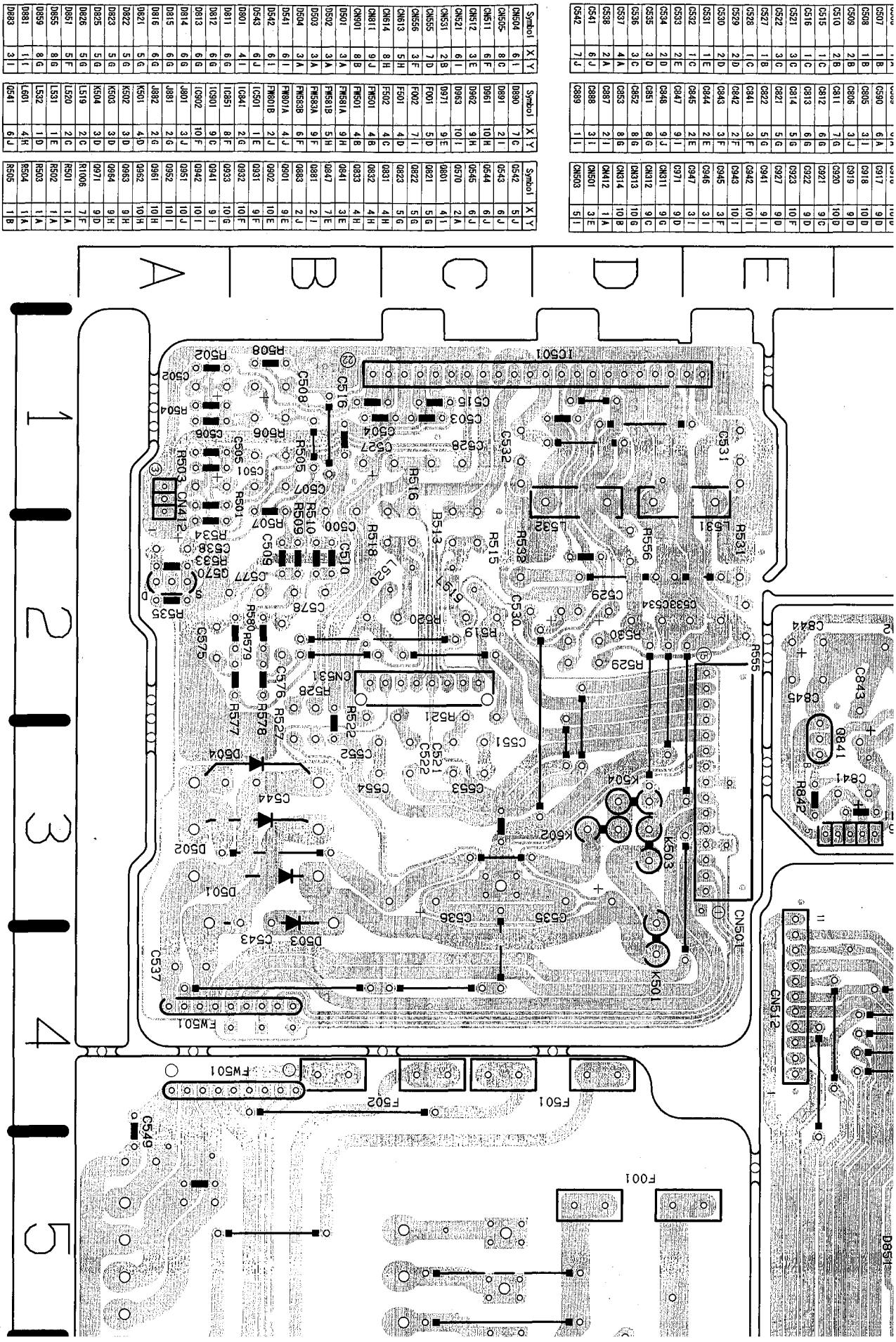

Symbol	X	Y
C507	1	B
C508	1	B
C509	2	B
C510	2	B
C515	1	C
C516	1	C
C521	3	C
C522	3	C
C527	1	B
C528	1	C
C529	2	D
C530	2	D
C531	1	E
C532	1	C
C533	2	E
C534	2	D
C535	3	D
C536	3	C
C537	4	A
C538	2	A
C541	6	J
C542	7	J

Symbol	X	Y
C900	6	A
C905	3	I
C906	3	J
C911	7	G
C912	6	G
C913	6	G
C914	5	G
C922	5	G
C927	5	G
C941	3	I
C942	3	F
C943	3	F
C944	2	E
C945	2	E
C947	3	I
C948	9	J
C951	8	G
C952	8	G
C953	8	G
C957	2	I
C958	3	I
C959	1	I

Symbol	X	Y
C917	9	D
C918	10	D
C919	9	D
C920	10	D
C921	9	C
C922	9	D
C923	10	F
C927	9	D
C941	9	I
C942	10	I
C943	10	F
C946	3	I
C947	3	I
C971	9	D
CN311	9	G
CN312	9	C
CN313	10	G
CN314	10	B
CN412	1	A
CN501	3	E
CN503	5	I

Symbol	X	Y
CN504	6	I
CN505	8	C
CN511	6	F
CN512	3	E
CN521	6	I
CN531	2	B
CN555	7	D
CN556	3	F
CN613	5	H
CN614	8	H
CN811	9	J
CN901	8	B
D501	3	A
D502	3	A
D503	3	A
D504	3	A
D541	6	I
D542	6	I
D543	6	J
D801	4	I
D811	6	G
D812	6	G
D813	6	G
D814	6	G
D815	6	G
D816	6	G
D821	5	G
D822	5	G
D823	5	G
D825	5	G
D826	5	G
D851	5	F
D855	8	G
D859	8	G
D861	1	I
D883	3	I

Symbol	X	Y
D890	7	C
D891	2	I
D961	10	H
D962	9	H
D963	10	I
D971	9	E
F001	5	D
F002	7	I
F501	4	D
F502	4	C
FW501	4	B
FW601A	4	J
FW601B	2	J
FW633A	9	F
FW633B	6	F
IC501	1	E
IC841	2	G
IC851	8	F
IC901	9	C
IC902	10	F
J801	3	J
J882	2	G
K501	4	D
K502	3	D
K503	3	D
K504	3	D
L519	2	C
L520	2	C
L531	1	E
L532	1	D
L601	4	H
Q541	6	J

Symbol	X	Y
Q542	5	J
Q543	6	J
Q544	6	J
Q545	6	J
Q570	2	A
Q601	4	I
Q821	5	G
Q822	5	G
Q831	4	H
Q832	4	H
Q833	4	H
Q841	3	E
Q847	7	E
Q881	2	I
Q883	2	J
Q901	9	E
Q902	10	E
Q931	9	F
Q932	10	F
Q933	10	G
Q941	9	I
Q942	10	I
Q951	10	J
Q952	10	I
Q961	10	H
Q962	10	H
Q963	9	H
Q964	9	H
Q971	9	D
R1006	7	F
R501	1	A
R502	1	A
R503	1	A
R504	1	A
R505	1	B

Printed Circuit Boards

■ System Control / POWER AMP. P.C. Board (ENH-271)

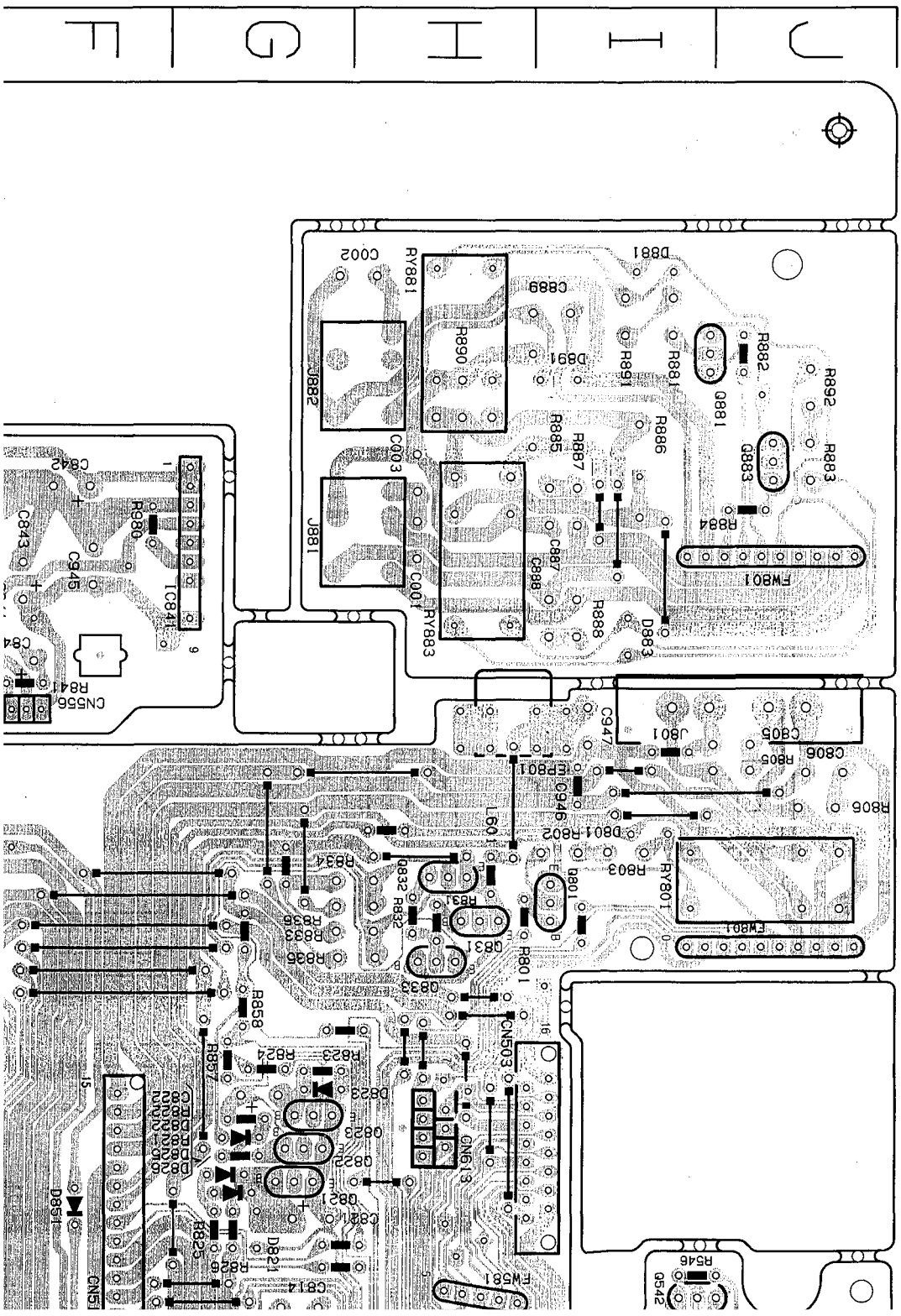

Location List (ENH-271)

Symbol	X	Y
C001	2	H
C002	1	G
C003	2	H
C496	5	A
C497	5	A
C498	5	A
C499	5	D
C500	1	B
C501	1	A
C502	1	A
C503	1	C
C504	1	B
C505	1	A
C506	1	A
C507	1	B
C508	1	B
C509	2	B

Symbol	X	Y
C543	3	B
C544	3	A
C547	7	A
C548	7	B
C549	5	A
C551	3	C
C552	3	B
C553	3	C
C554	3	C
C575	2	A
C576	2	B
C577	2	B
C578	2	B
C589	6	A
C590	6	A
C805	3	I
C806	3	J

Symbol	X	Y
C901	9	C
C902	10	C
C903	9	D
C904	10	D
C907	9	E
C908	10	E
C909	9	E
C910	10	F
C911	9	E
C912	10	D
C913	9	E
C914	10	E
C915	9	D
C916	10	D
C917	9	D
C918	10	D
C919	9	D

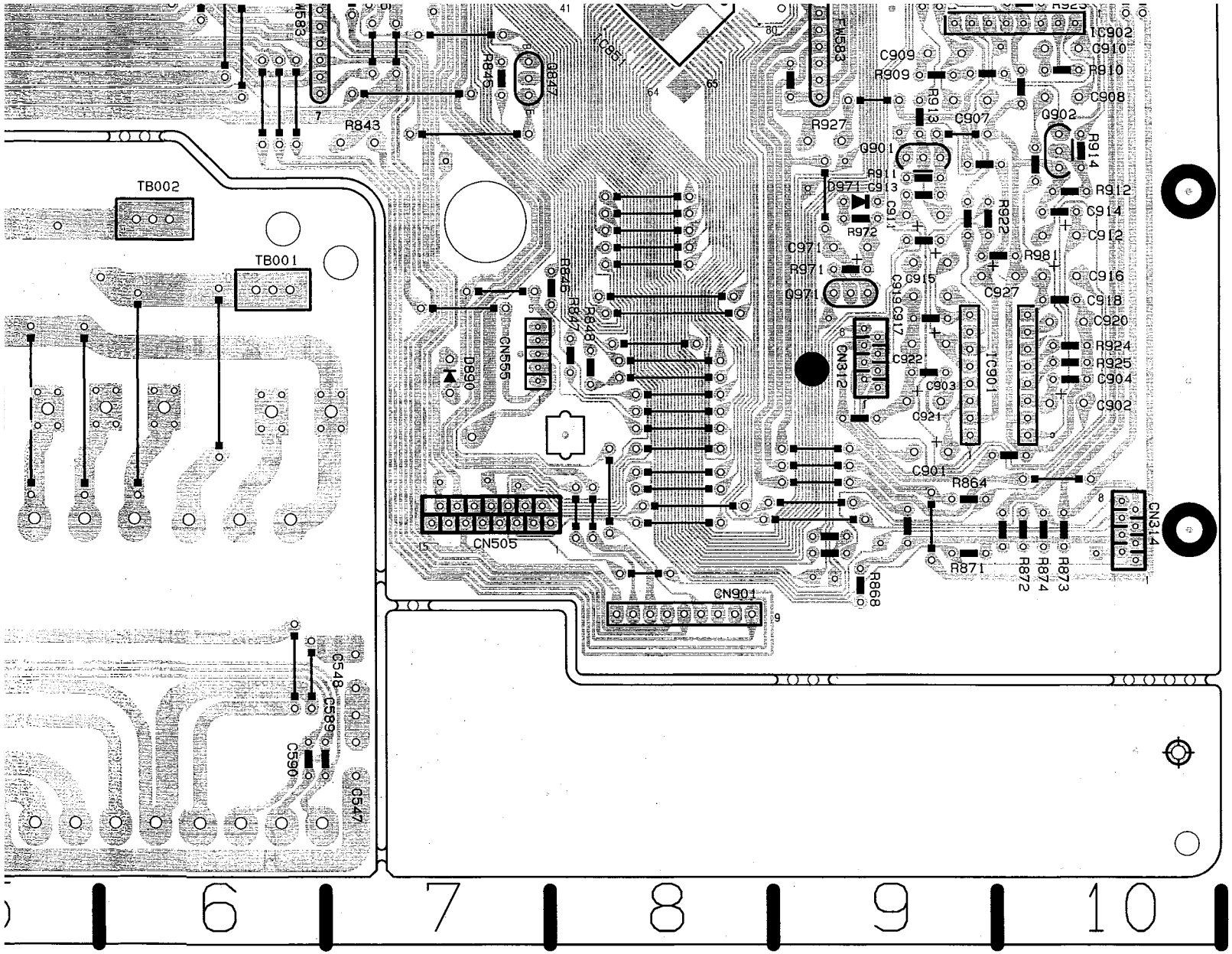

R885	2	H
R886	2	I
R887	2	I
R888	3	I
R890	2	H
R891	1	I
R892	2	J
R893	8	G
R909	9	E
R910	10	E
R911	9	E
R912	10	E
R913	2	I
R913	3	I
R913	9	E
R913	3	J
R913	1	I
R913	2	J

R941	9	I
R942	10	I
R943	10	I
R944	9	I
R945	10	I
R951	10	J
R952	10	J
R953	10	J
R954	10	J
R955	9	I
R961	10	H
R962	10	H
R963	9	H
R964	9	H
R965	9	H
R966	9	I
R971	9	D
R972	9	D

Symbol	X	Y
R980	2	F
R981	10	D
R982	8	J
R983	7	I
R984	8	I
RY801	4	I
RY881	1	H
RY883	3	H
S001	8	J
TB001	6	D
TB002	6	D
TP001	5	C
TP002	5	C
TP003	5	C
TP004	6	C
TP005	6	C
TP006	6	C
TP007	6	C
TP008	6	A
TP009	6	A
TP00A	6	A
TP00B	6	A
TP00C	6	A
TP00D	6	A
TP00E	5	A
TP00F	5	A
TP00G	5	A
TP00H	5	A
TX0009	4	A
TX0009	4	B
TX0009	4	A
X851	8	F

Symbol	X	Y
R506	1	B
R507	1	B
R508	2	B
R509	2	B
R510	2	B
R513	1	C
R515	1	C
R516	1	C
R518	1	C
R519	2	C
R520	2	B
R521	2	C
R522	2	C
R527	3	B
R528	3	B
R529	2	D
R530	2	D
R531	2	E
R532	2	C
R533	2	A
R534	2	A
R535	2	A
R541	6	J
R542	6	J
R543	6	I
R544	6	I
R545	7	J
R546	5	J
R547	6	J
R548	6	J
R549	6	J
R550	6	J
R551	6	J
R552	6	J
R555	2	E
R556	2	D

Symbol	X	Y
R577	2	B
R578	2	B
R579	2	B
R580	2	B
R801	4	H
R802	4	I
R803	4	I
R805	3	J
R806	3	J
R821	5	G
R822	5	G
R823	5	G
R824	5	G
R825	5	G
R826	5	G
R827	8	G
R831	4	H
R832	4	H
R833	4	H
R834	4	H
R835	4	H
R836	4	H
R841	3	F
R842	3	E
R843	7	E
R845	7	E
R846	8	D
R847	8	D
R848	8	C
R851	8	F
R855	8	G
R857	4	G
R858	4	G
R859	8	G
R861	9	I
R863	8	F

Symbol	X	Y
R864	9	C
R865	9	G
R866	9	H
R867	8	G
R868	9	B
R871	9	B
R872	10	C
R873	10	C
R874	10	C
R875	10	G
R876	10	G
R877	10	G
R878	10	G
R879	9	G
R881	1	I
R882	2	J
R883	2	J
R884	2	J
R885	2	H
R886	2	I
R887	2	I

Symbol	X	Y
R913	2	J
R913	2	J
R913	1	I
R914	10	E
R922	9	D
R923	10	F
R924	10	D
R925	10	D
R927	9	E
R931	9	F
R932	10	F
R933	9	F
R934	10	F
R935	9	F
R936	10	F
R937	9	J
R938	9	J
R941	9	I
R942	10	I
R943	10	I

P2-50-a P2-50-b

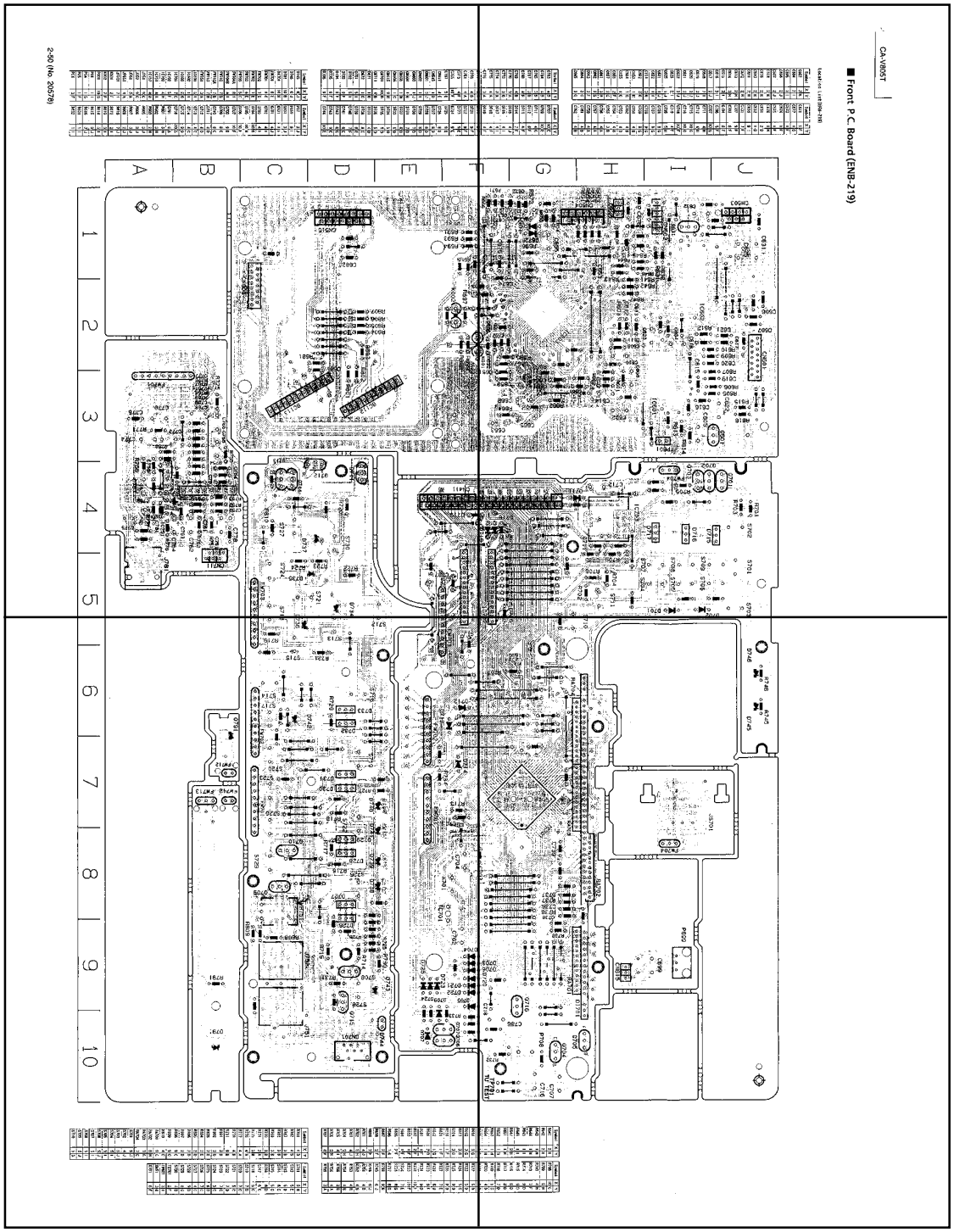

P2-50-c P2-50-d

C777	3	B	D720	9	F
C778	4	B	D721	9	F
C781	4	A	D722	9	F
C785	4	F	D723	9	E
C786	10	F	D724	9	E
C787	5	E	D725	9	E
CN411	4	E	D726	8	D
CN515	1	D	D727	8	D
CN601	3	J	D728	8	D
CN602	1	I	D729	8	D
CN603	1	J	D730	7	D
CN604	1	G	D731	7	D
CN605	1	H	D732	6	D
CN606	1	C	D733	6	D
CN615	9	H	D734	5	D
CN701	10	D	D735	5	D
CN711	4	B	D736	5	D
D671	1	G	D737	4	D
D672	1	G	D738	8	E
D701	5	I	D739	8	E
D702	5	I	D740	7	E
D703	9	F	D741	8	E
D704	9	F	D742	6	C
D705	9	F	D743	9	E
D706	9	F	D744	10	E

Symbol	X	Y	Symbol	X	Y
D745	6	J	P07	3	J
D746	6	J	P699	9	I
D791	10	B	Q601	3	J
D1701	10	H	Q631	1	I
FW701	8	E	Q701	4	J
FW701	8	C	Q702	4	I
FW702	7	C	Q703	4	I
FW702	7	E	Q704	10	G
FW703	6	E	Q705	10	H
FW703	5	C	Q706	10	F
FW704A	8	I	Q707	10	F
FW704B	4	I	Q708	9	D
FW712	7	B	Q709	8	C
FW712A	7	B	Q710	8	C
FW713	7	B	Q711	4	D
FW751	3	A	Q712	4	D
IC601	3	I	Q713	4	C
IC602	1	I	Q714	4	C
IC603	2	G	Q715	9	D
IC701	7	G	Q716	10	G
IC702	5	F	Q791	6	B
IC703	4	H	R601	3	H
IC751	4	A	R602	3	H
IC752	4	B	R603	2	H
J751	9	C	R605	3	J
J752	9	C	R606	3	J
J761	5	A	R607	3	J
JP951	4	A	R609	2	J
JS701	7	I	R610	2	J
K001	2	F	R612	2	I
K002	2	F	R613	3	I
P001	10	G	R614	3	I
P01	1	I	R615	3	J
P04	1	G	R616	3	J
P05	1	F	R631	1	I
P06	3	F	R632	1	I

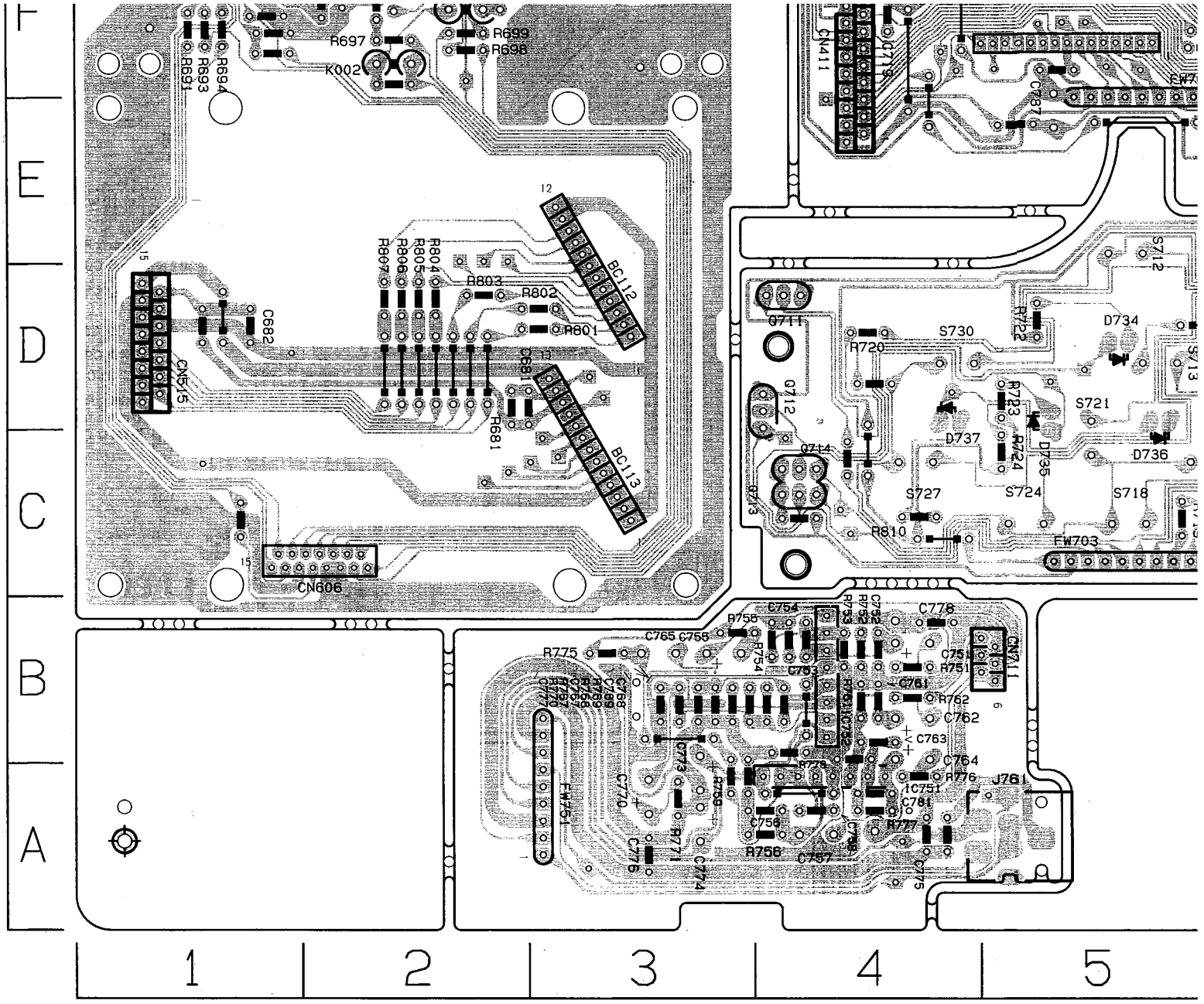

■ Front P.C. Board (ENB-219)

Location List(ENB-219)

Symbol	X	Y
C602	3	H
C604	2	I
C605	3	I
C606	2	J
C607	2	J
C608	3	H
C609	2	H
C610	2	H
C611	2	H
C612	2	H
C613	2	H
C614	3	H
C615	3	I
C616	3	I
C617	2	J
C618	2	I
C619	3	J
C620	2	J
C621	2	J
C622	3	J
C623	2	I
C625	1	J
C631	1	J
C632	1	I
C651	3	G
C652	3	G
C653	1	H
C654	1	G
C655	1	G
C656	2	F
C657	2	G
C661	3	H
C662	3	G
C663	3	F
C664	3	G
C665	3	G

Symbol	X	Y
C671	1	F
C672	1	G
C673	1	F
C674	1	F
C675	1	F
C676	1	H
C681	2	D
C682	1	D
C699	9	I
C701	7	F
C702	9	F
C703	8	F
C704	8	F
C706	5	F
C707	10	G
C711	4	H
C712	4	H
C715	10	G
C716	10	G
C718	10	F
C719	4	F
C735	5	H
C736	8	G
C737	8	G
C738	9	G
C739	8	G
C751	4	B
C752	4	B
C753	4	B
C754	4	B
C755	3	B
C756	4	A
C757	4	A
C758	4	A
C761	4	B
C762	4	B

Symbol	X	Y
C763	4	B
C764	4	B
C765	3	B
C767	3	B
C768	4	B
C769	4	B
C770	3	A
C773	3	B
C774	3	A
C775	4	A
C776	3	A
C777	3	B
C778	4	B
C781	4	A
C785	4	F

Symbol	X	Y
D707	10	E
D709	10	E
D711	4	G
D712	6	F
D713	6	F
D714	7	F
D715	4	J
D716	4	I
D717	4	I
D718	4	F
D719	4	F
D720	9	F
D721	9	F
D722	9	F
D723	9	E

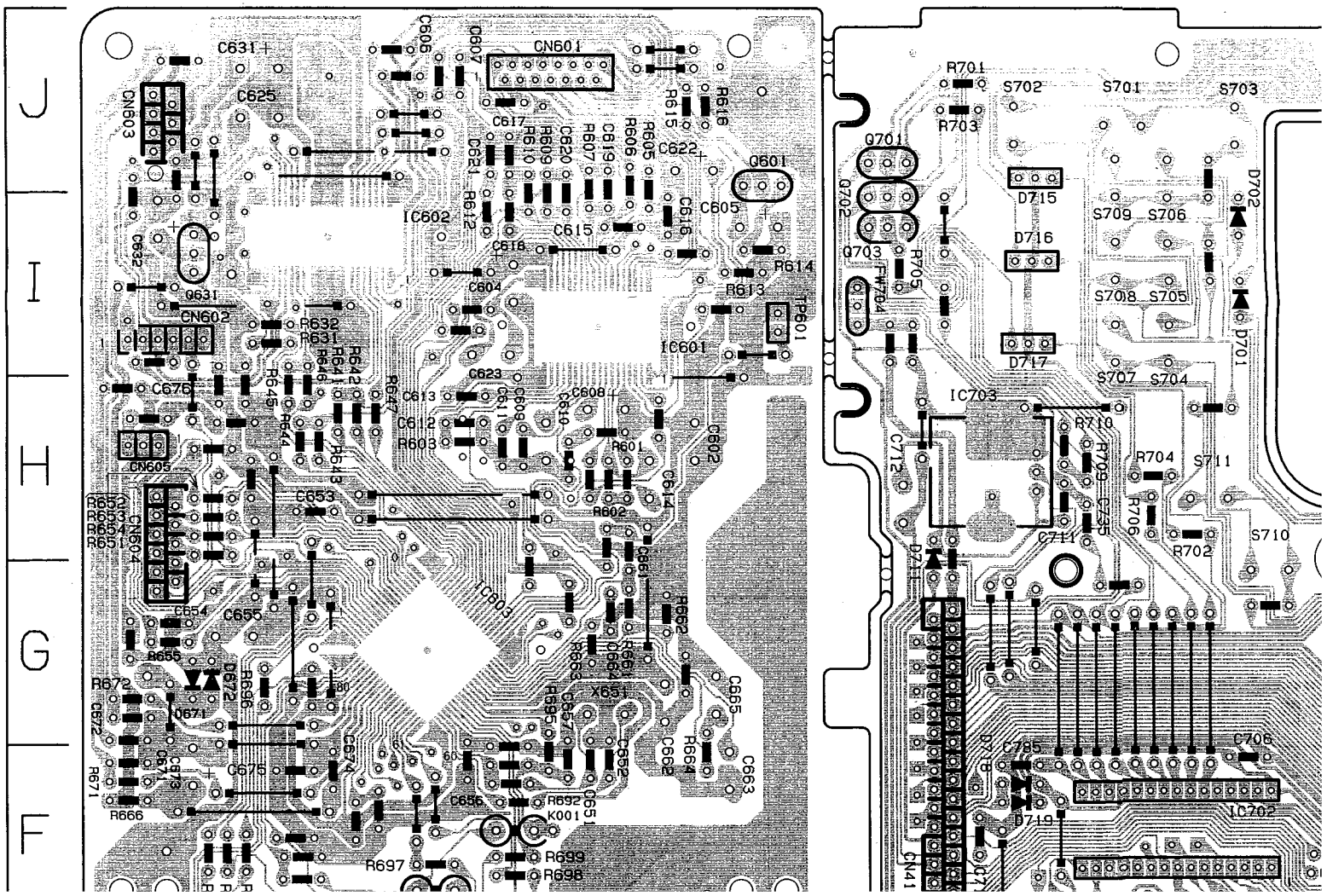

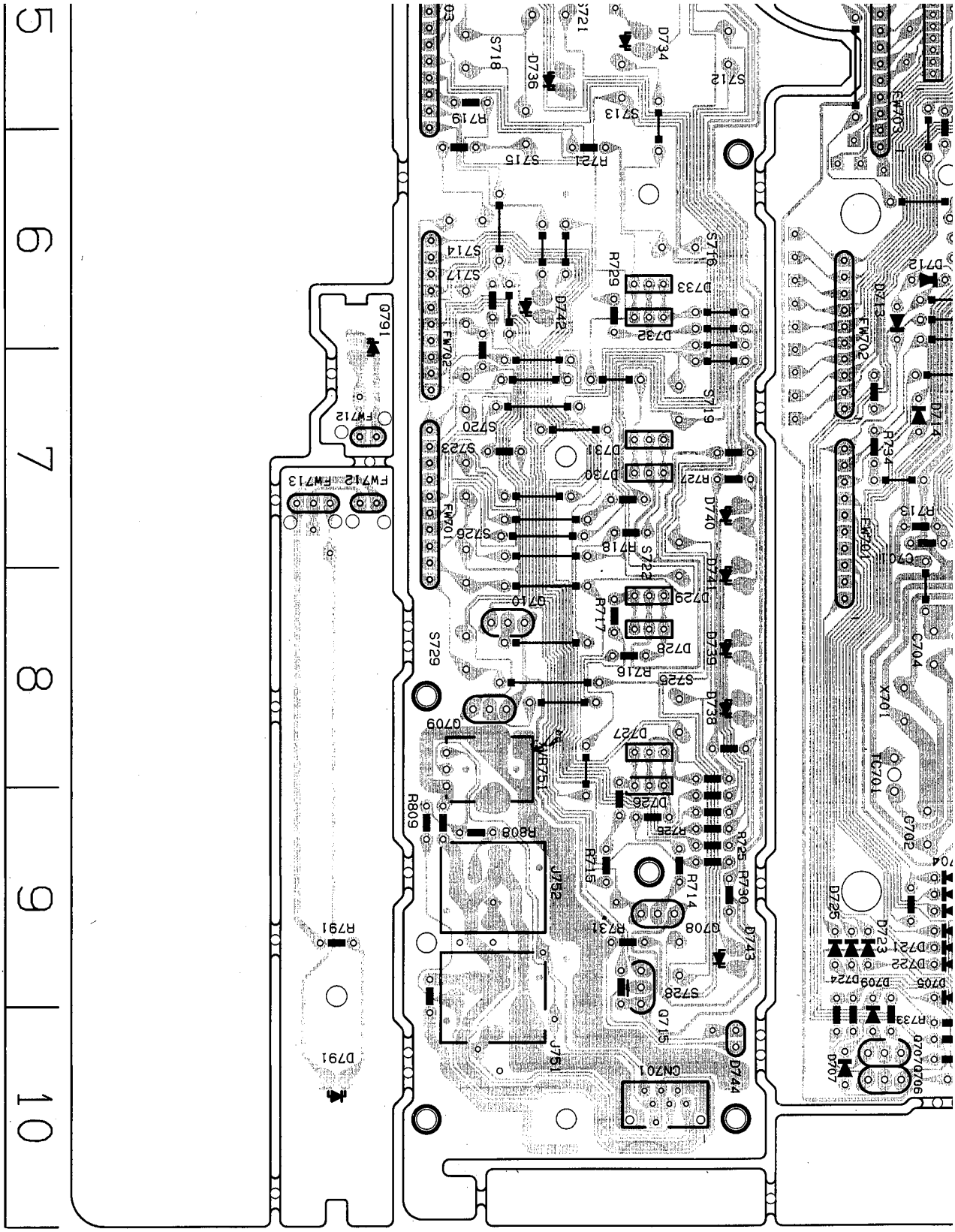

Symbol	X	Y
R761	4	B
R762	4	B
R767	3	B
R768	3	B
R769	3	B
R770	3	B
R771	3	A
R775	3	B
R776	4	A
R777	4	A
R778	4	B
R791	9	B
R801	3	D
R802	3	D
R803	2	D
R804	2	D
R805	2	D
R806	2	D
R807	2	D
R808	9	C
R809	9	C
R810	4	C
RA701	9	G
RA702	8	H
RA703	7	G
RA704	7	G
S701	5	J
S702	4	J
S703	5	J
S704	5	I
S705	5	I
S706	5	J
S707	5	I
S708	5	I
S709	5	J
S710	5	G

Symbol	X	Y
S711	5	H
S712	5	E
S713	5	D
S714	6	C
S715	5	C
S716	6	D
S717	6	C
S718	5	C
S719	7	D
S720	7	C
S721	5	C
S722	7	D
S723	7	C
S724	5	C
S725	8	D
S726	7	C
S727	4	C
S728	9	D
S729	8	C
S730	4	D
TC701	8	F
TP601	3	I
X651	3	G
X701	8	F

R662	3	G
R663	3	G
R664	3	G
R666	1	F
R671	1	F
R672	1	G
R681	2	D
R691	1	F
R692	2	F
R693	1	F
R694	1	F
R695	2	F
R696	1	G
R697	2	F
R698	2	F
R699	2	F
R701	4	J
R702	5	H
R703	4	J
R704	5	H
R705	4	I
R706	5	H
R707	6	F

R723	6	D
R724	5	C
R725	9	D
R726	9	D
R727	7	E
R729	6	D
R730	9	E
R731	9	D
R732	10	F
R733	10	F
R734	7	E
R736	8	G
R737	8	G
R738	9	G
R745	6	J
R746	6	J
R751	4	B
R752	4	B
R753	4	B
R754	4	B
R755	3	B
R756	4	A
R759	3	A

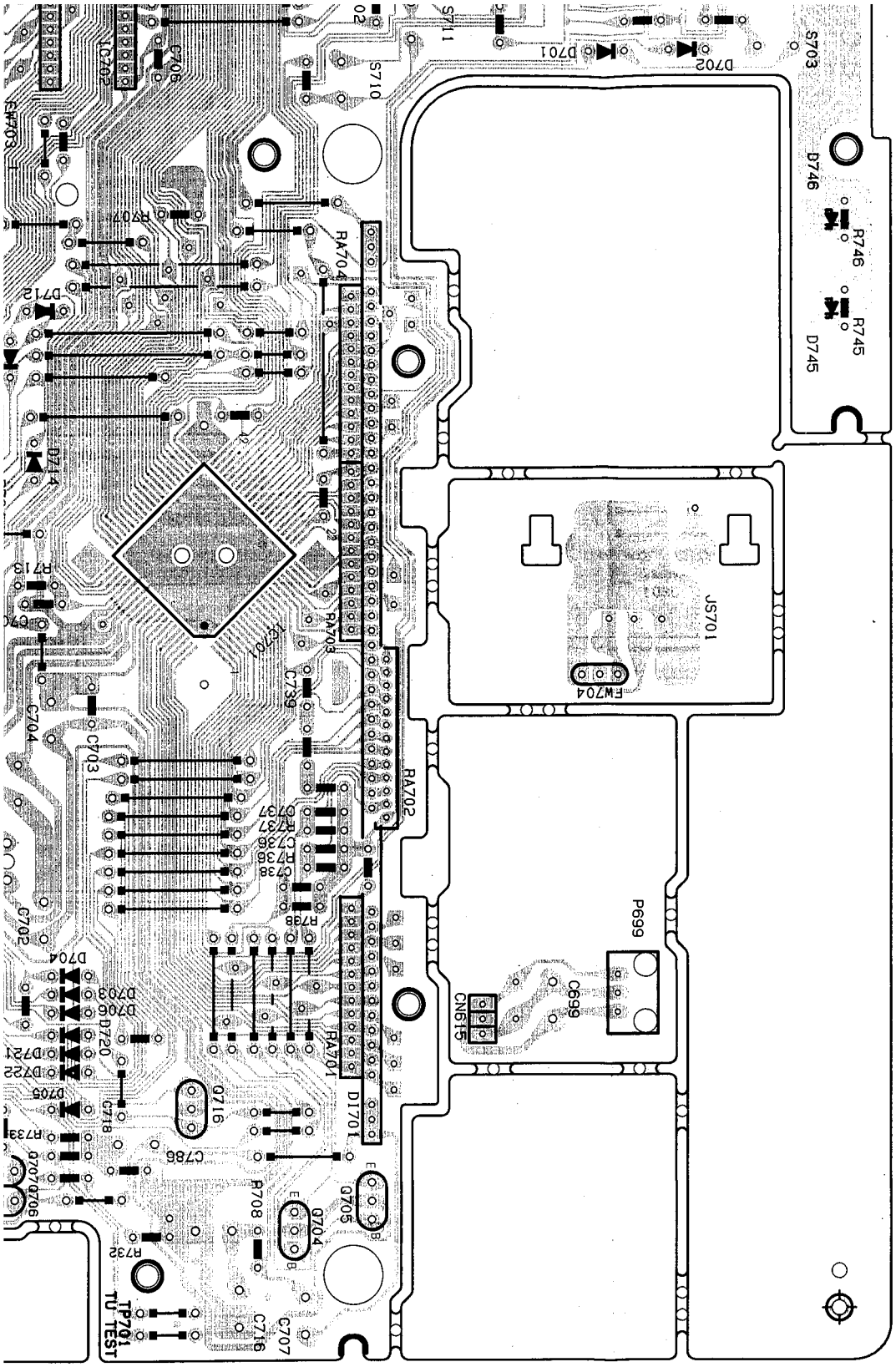

Symbol	X	Y
R641		2H
R642		2H
R643	1	H
R644	1	H
R645	1	I
R646	1	I
R647	2	H
R651	1	H
R652	1	H
R653	1	H
R654	1	H
R655	1	G
R661	3	G
R662	3	G
R663	3	G
R664	3	G
R666	1	F

Symbol	X	Y
R708	10	G
R709	5	H
R710	4	H
R713	7	F
R714	9	D
R715	9	D
R716	8	D
R717	8	D
R718	7	D
R719	5	C
R720	4	D
R721	6	D
R722	5	D
R723	5	D
R724	5	C
R725	9	D
R726	9	D

P2-51-a

P2-51-b

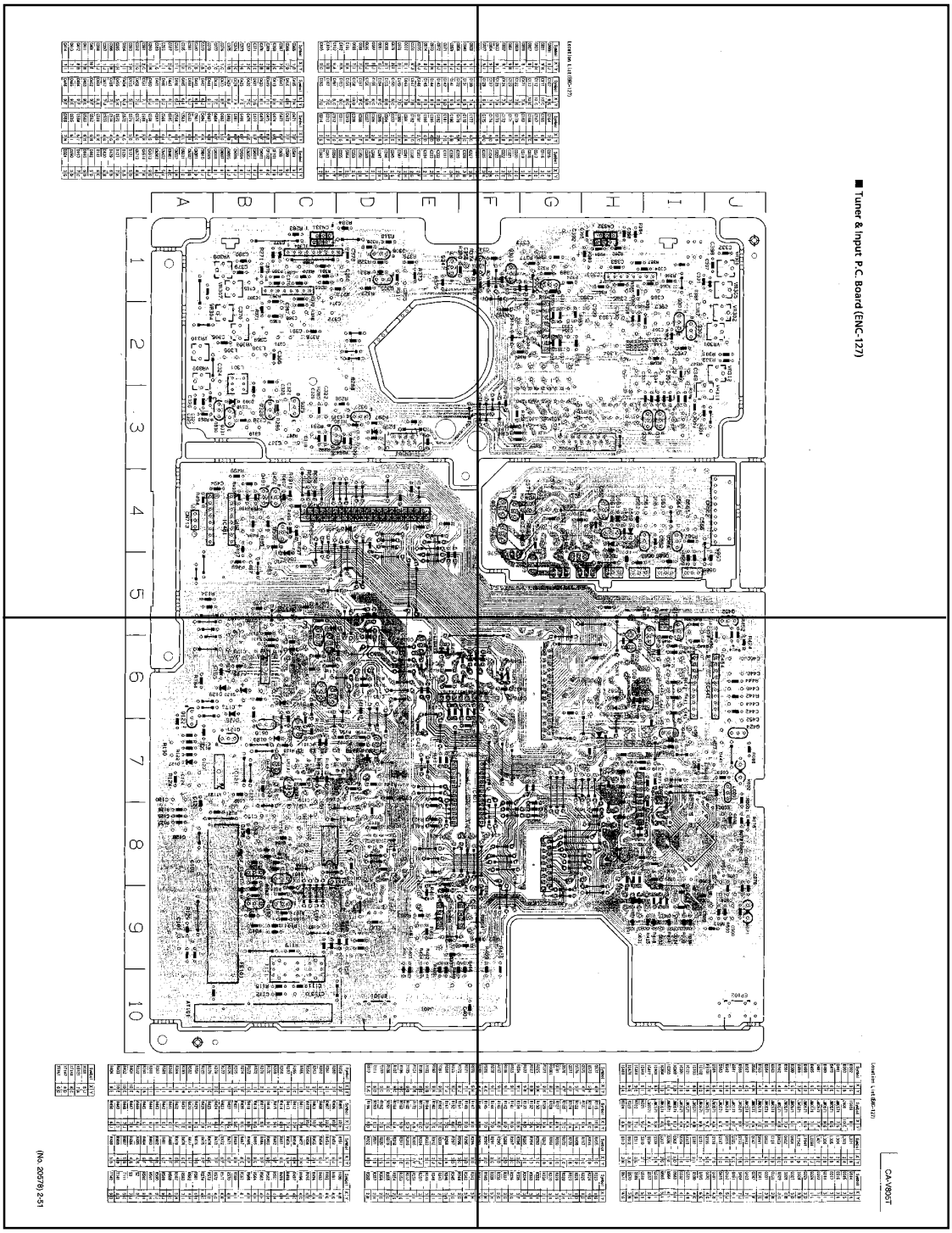

P2-51-c

P2-51-d

C071	8	I	C142	9	D	C181	7	C	C331	1	I
C072	8	J	C143	8	D	C182	7	D	C332	1	J
C073	8	H	C144	8	D	C185	6	D	C333	2	I
C074	8	J	C145	8	D	C186	6	D	C334	2	I
C075	8	J	C146	8	D	C191	5	C	C337	2	F
C076	8	J	C147	7	D	C192	5	C	C338	2	G
C077	8	I	C148	7	D	C301	2	H	C341	2	H
C078	8	I	C149	7	D	C302	2	H	C342	2	H
C079	8	I	C150	8	C	C303	2	G	C345	2	G
C080	8	I	C153	8	B	C304	2	G	C346	2	G
C081	8	J	C154	8	C	C305	2	B	C347	2	I
C082	8	J	C155	8	C	C306	2	B	C348	2	I
C086	8	J	C156	8	B	C307	3	G	C349	2	I
C088	7	J	C157	9	C	C308	3	F	C350	2	I
C089	7	I	C158	10	D	C309	2	H	C353	2	G
C101	8	A	C159	8	C	C310	2	H	C354	2	G
C102	8	B	C160	8	C	C311	2	G	C355	1	E
C103	9	A	C161	8	C	C312	2	G	C356	1	F
C104	9	B	C162	7	C	C313	2	F	C361	2	I
C105	9	C	C163	7	C	C314	2	G	C362	2	I

Symbol	X	Y	Symbol	X	Y	Symbol	X	Y	Symbol	X	Y
C365	1	B	C415	7	H	C471	7	F	C589	9	J
C366	1	D	C416	8	H	C472	7	F	C590	9	J
C367	2	C	C417	7	H	C473	6	F	C600	6	D
C368	2	C	C418	8	H	C474	6	E	CF101	8	B
C369	2	B	C419	7	I	C475	6	E	CF102	8	C
C370	2	B	C420	8	I	C476	6	F	CH001	8	I
C371	2	C	C421	7	G	C477	6	F	CH002	8	J
C372	2	C	C422	7	G	C478	6	E	CH003	7	I
C373	1	G	C425	7	E	C480	6	F	CH004	8	I
C374	1	C	C426	7	H	C481	6	F	CH005	8	J
C375	1	B	C429	8	F	C482	4	B	CH006	8	J
C376	1	C	C430	8	F	C483	5	C	CH007	8	I
C377	1	C	C431	7	E	C484	6	F	CH008	8	I
C378	1	D	C441	6	I	C487	4	B	CH009	8	J
C379	1	B	C442	6	J	C494	4	A	CH010	8	J
C380	1	B	C443	6	I	C561	4	I	CN301	3	D
C381	1	C	C444	6	J	C562	4	I	CN302	3	G
C385	1	H	C445	6	I	C563	4	I	CN331	1	C
C386	1	I	C446	6	J	C564	4	I	CN332	1	H
C387	2	J	C447	6	I	C565	4	J	CN401	4	C
C388	1	I	C448	6	J	C566	4	I	CN402	5	I
C389	1	G	C449	6	I	C567	4	G	CN502	4	J
C390	1	H	C450	6	J	C568	4	G	CN513	9	G
C391	2	C	C451	7	I	C569	5	H	CN514	7	G
C392	1	G	C452	7	J	C570	4	G	CN713	4	A
C393	1	H	C453	5	I	C571	5	G	D121	5	D
C394	1	I	C454	6	J	C572	4	G	D126	6	B
C395	1	H	C455	5	H	C573	4	G	D127	7	A
C396	1	H	C456	7	I	C574	4	G	D129	6	B
C397	1	J	C457	7	J	C575	4	G	D130	6	B
C398	1	J	C461	9	E	C581	6	H	D142	6	C
C401	10	F	C462	9	F	C582	6	H	D182	5	D
C411	7	H	C463	9	E	C583	6	H	D183	6	D
C412	8	H	C464	9	F	C584	6	I	D190	7	C
C413	7	I	C465	9	E	C585	6	I	D290	3	D
C414	7	I	C466	9	F	C586	7	H	D301	3	G

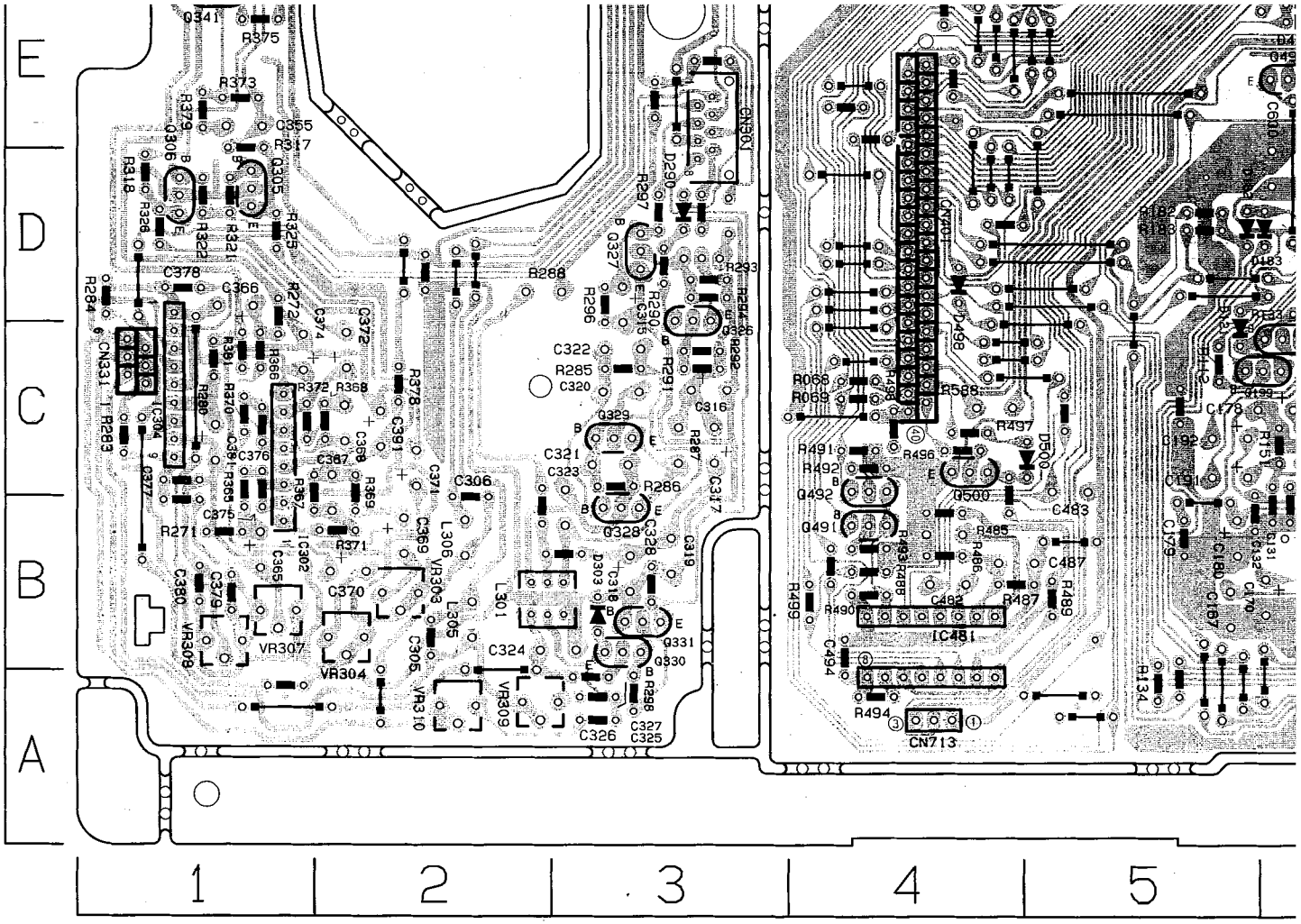

■ Tuner & Input P.C. Board (ENC-127)

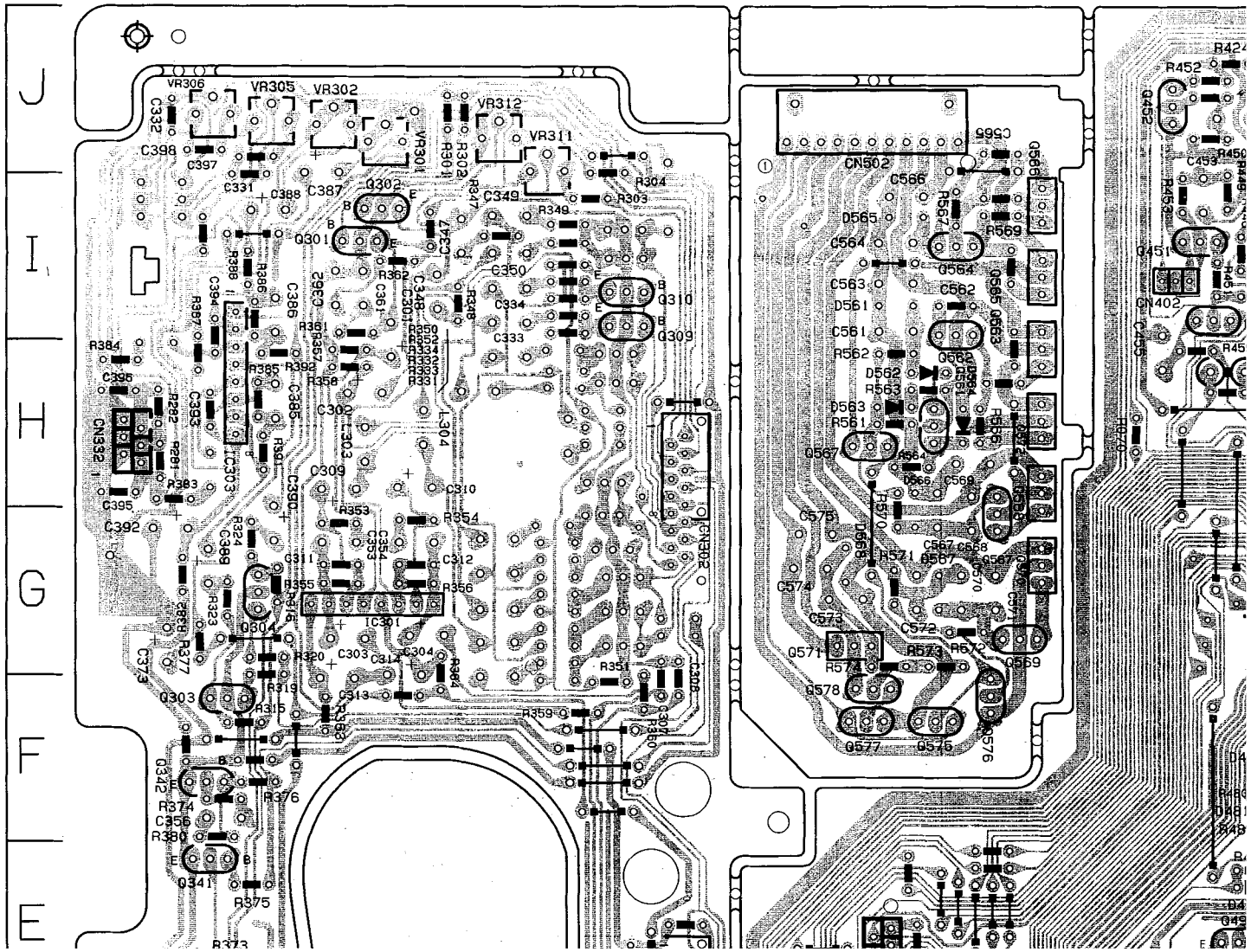

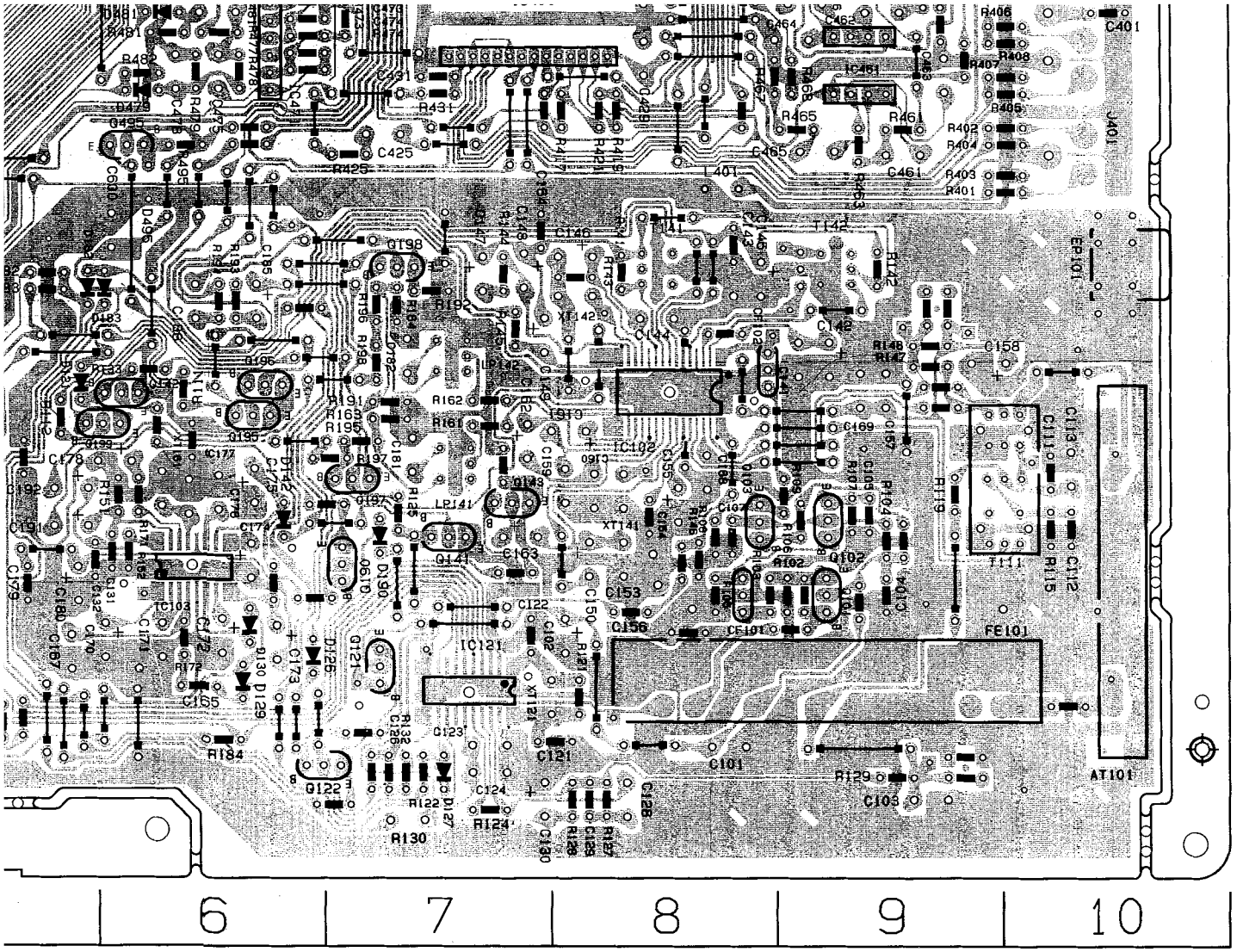

R070	5	H
R071	7	I
R072	8	J
R075	8	J
R088	7	J
R091	9	H
R092	9	H
R102	9	B
R103	8	B
R104	9	B
R105	8	B
R106	9	C
R107	9	C
R108	8	C
R109	9	C
R111	6	D
R112	5	C

R147	9	D
R148	9	D
R151	6	C
R152	6	C
R161	7	C
R162	7	C
R163	7	C
R164	7	D
R171	6	C
R172	6	B
R182	5	D
R183	5	D
R184	6	A
R191	7	C
R192	7	D
R193	6	D
R194	6	D

R284	3	D
R295	3	D
R296	3	C
R297	3	D
R298	3	A
R301	2	J
R302	2	J
R303	3	I
R304	3	J
R315	1	F
R316	1	G
R317	1	E
R318	1	D
R319	1	G
R320	1	G
R321	1	D
R322	1	D

R342	3	H
R343	3	G
R344	3	G
R345	3	G
R346	3	G
R347	2	I
R348	2	I
R349	3	I
R350	3	I
R351	3	F
R352	3	I
R353	2	G
R354	2	G
R355	2	G
R356	2	G
R357	2	H
R358	2	H

Symbol	X	Y
R359	3	F
R360	3	F
R361	2	I
R362	2	I
R363	2	F
R364	2	F
R365	1	B
R366	1	C
R367	1	B
R368	2	C
R369	2	B
R370	1	C
R371	2	B
R372	1	C
R373	1	E
R374	1	F
R375	1	E
R376	1	F
R377	1	G
R378	2	C
R379	1	E
R380	1	F
R381	1	C
R382	1	G
R383	1	H
R384	1	H
R385	1	H
R386	1	I
R387	1	I
R388	1	I
R391	1	H
R392	1	H
R401	10	E
R402	10	E
R403	10	E
R404	9	E

Symbol	X	Y
R405	10	E
R406	10	F
R407	10	E
R408	9	F
R409	10	F
R410	10	F
R411	7	H
R412	7	H
R413	7	H
R414	8	H
R415	9	I
R416	9	I
R417	8	E
R418	8	G
R419	8	E
R420	8	G
R421	8	E
R422	8	G
R423	6	I
R424	6	J
R425	7	E
R426	7	H
R429	8	G
R430	9	H
R431	7	E
R432	6	F
R441	6	I
R442	6	J
R443	6	I
R444	6	J
R445	6	I
R446	6	I
R447	7	I
R448	7	J
R449	6	I
R450	6	J

Symbol	X	Y
R451	6	I
R452	6	J
R453	5	I
R454	6	J
R455	7	I
R456	8	I
R457	7	H
R458	8	H
R459	6	H
R461	9	E
R462	9	F
R463	9	E
R464	9	F
R465	9	E
R466	9	F
R467	8	E
R468	9	E
R471	6	F
R472	6	F
R473	7	F
R474	6	E
R475	6	F
R476	7	G
R477	6	F
R478	6	E
R479	6	E
R480	6	F
R481	6	F
R482	6	E
R483	6	F
R484	6	F
R485	4	B
R486	4	B
R487	5	B
R488	4	B
R489	5	B

Symbol	X	Y
R490	4	B
R491	4	C
R492	4	C
R493	4	B
R494	4	A
R495	6	E
R496	4	C
R497	4	C
R498	4	C
R499	4	B
R561	4	H
R562	4	H
R563	4	H
R564	4	H
R566	4	H
R567	4	I
R569	4	I
R570	4	H
R571	4	G
R572	4	G
R573	4	G
R574	4	G
R581	6	H
R582	6	H
R583	7	I
R587	5	H
R588	4	C
R589	9	J
R590	9	J
R591	8	H
R592	8	H
S2	8	J
S3	7	J
T111	9	C
T141	8	D
T142	9	D

Symbol	X	Y
X081	8	J
XT121	7	A
XT141	8	C
XT142	8	D
XT161	6	C

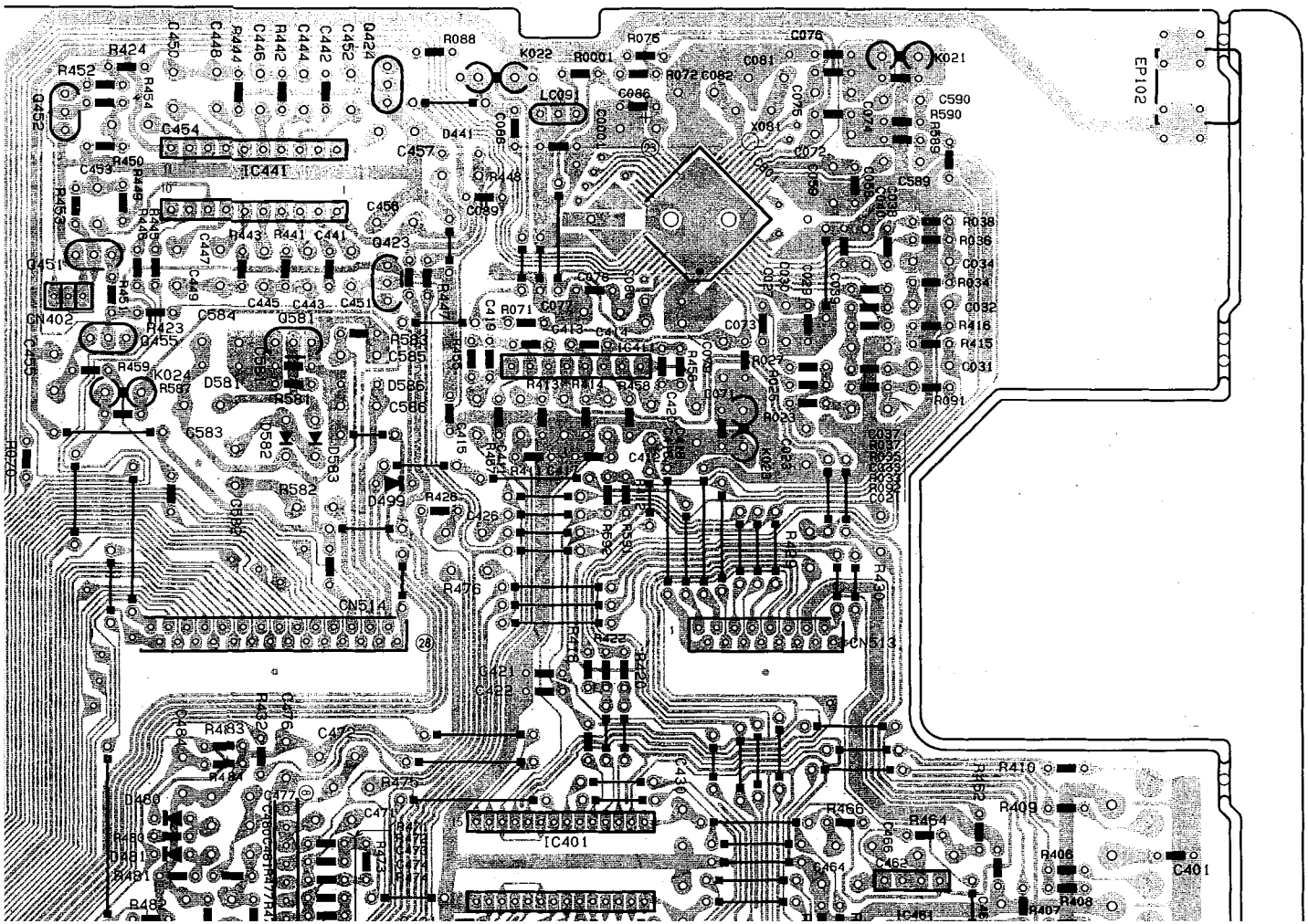

Location List(ENC-127)

Symbol	X	Y
D302	3	G
D303	3	B
D441	7	J
D479	6	E
D480	6	F
D481	6	F
D495	6	E
D498	4	D
D499	7	H
D500	5	C
D561	4	I
D562	4	H
D563	4	H
D564	4	H
D565	4	I
D566	4	H
D567	4	G
D568	4	G
D581	6	H
D582	6	H
D583	6	H
D586	6	H
FE101	9	B
IC102	8	C
IC103	6	B
IC121	7	B
IC301	2	G
IC302	1	B
IC303	1	I
IC304	1	D
IC401	8	E
IC411	7	H
IC441	6	I
IC461	9	E
IC471	6	E
IC481	4	A

Symbol	X	Y
IC801	8	I
J401	10	E
JM0571	7	G
JM0571	6	G
JM0571	9	G
JM0571	7	H
JM0571	7	I
JM0571	8	G
JM0571	5	I
JM0571	5	I
JM0571	7	J
JM0571	4	B
JM0571	6	I
JM0571	8	E
JM0571	7	E
JM0571	4	A
JM0571	7	F
JM0571	9	F
JM0571	9	F
JM0571	8	F
JM0571	6	E
JM0571	4	A
JM0571	9	E
JM0571	9	E
JM0571	4	B
JM0571	4	A
JM0571	4	A
JM0571	6	J
JM0571	6	F
JM0571	4	E
JM0571	8	H
JM0571	4	C
JM0571	9	J
K021	9	J
K022	7	J
K023	8	H
K024	6	H

Symbol	X	Y
L301	2	B
L303	2	H
L304	2	H
L305	2	B
L306	2	B
L401	8	E
LC091	7	J
LP141	7	C
LP142	7	D
Q101	9	B
Q102	9	C
Q103	8	C
Q121	7	B
Q122	6	A
Q141	7	C
Q142	6	C
Q143	7	C
Q190	7	B
Q195	6	C
Q196	6	C
Q197	7	C
Q198	7	D
Q199	5	C
Q301	2	I
Q302	2	I
Q303	1	F
Q304	1	G
Q305	1	D
Q306	1	D
Q307	3	G
Q308	3	H
Q309	3	I
Q310	3	I
Q311	3	G
Q312	3	G
Q313	3	H

Symbol	X	Y
Q314	3	H
Q315	3	G
Q316	3	G
Q317	3	I
Q318	3	I
Q323	1	I
Q324	1	I
Q325	3	D
Q326	3	D
Q327	3	D
Q328	3	B
Q329	3	C
Q330	3	B
Q331	3	B
Q341	1	E
Q342	1	F
Q423	7	I
Q424	7	J
Q451	6	I
Q452	5	J
Q455	6	I
Q491	4	B
Q492	4	C
Q495	6	E
Q500	4	C
Q561	4	H
Q562	4	I
Q563	5	I
Q564	4	I
Q565	5	I
Q566	5	I
Q567	5	H
Q568	5	H
Q569	5	G
Q570	5	G
Q571	4	G

Symbol	X	Y
Q572	4	H
Q573	5	H
Q575	4	F
Q576	5	F
Q577	4	F
Q578	4	F
Q581	6	I
R0001	8	J
R023	9	H
R025	9	H
R027	8	H
R033	9	H
R034	9	I
R035	9	I
R036	9	I
R037	9	I
R038	9	I
R068	4	C
R069	4	C
R070	5	H
R071	7	I
R072	8	J
R075	8	J

Symbol	X	Y
R115	10	B
R119	9	C
R121	8	A
R122	7	A
R124	7	A
R125	7	C
R127	8	A
R128	8	A
R129	9	A
R130	7	A
R132	7	A
R133	6	D
R134	5	B
R141	8	D
R142	9	D
R143	8	D
R144	7	D
R145	7	D
R146	8	B
R147	9	D
R148	9	D
R151	6	C
R152	6	C

Symbol	X	Y
R195	7	C
R196	7	D
R197	7	C
R198	7	D
R271	1	B
R272	1	C
R280	1	C
R281	1	H
R282	1	H
R283	1	C
R284	1	D
R285	3	C
R286	3	C
R287	3	C
R288	2	D
R290	3	D
R291	3	C
R292	3	C
R293	3	D
R294	3	D
R295	3	D
R296	3	C
R297	3	D

Symbol	X	Y
R323	1	G
R324	1	G
R325	1	D
R326	1	D
R327	3	G
R328	3	H
R329	3	G
R330	3	H
R331	3	I
R332	3	I
R333	3	I
R334	3	I
R335	3	F
R336	3	G
R337	3	G
R338	3	G
R339	3	H
R340	3	H
R341	3	H
R342	3	H
R343	3	G
R344	3	G
R345	3	G

P2-52-a

P2-52-b

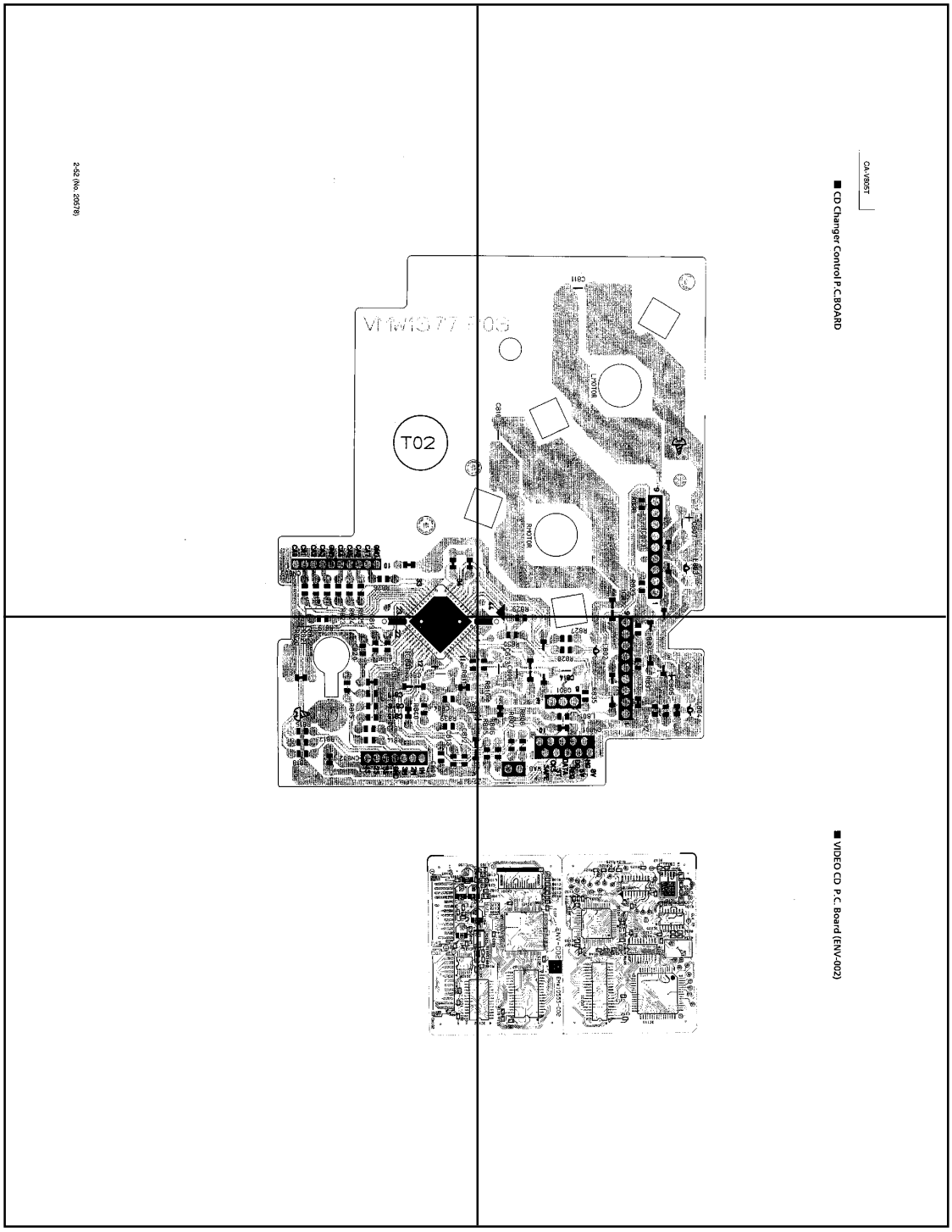

P2-52-c

P2-52-d

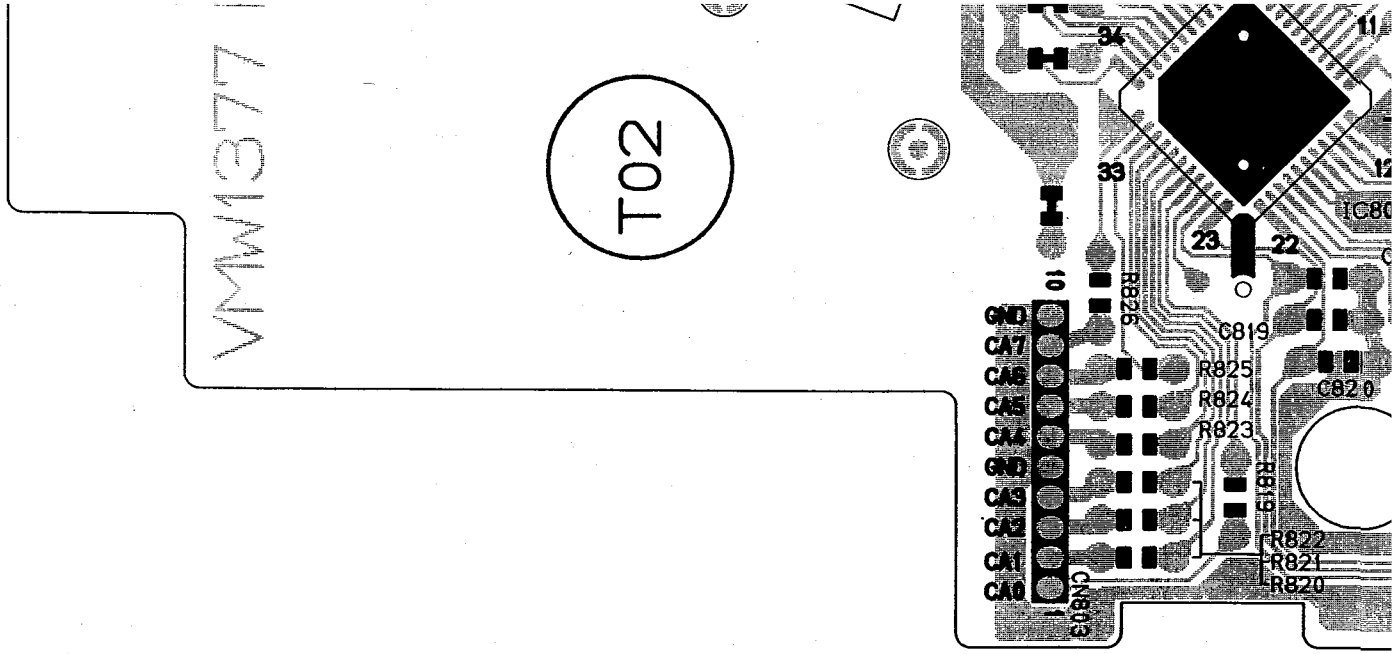

2-52 (No. 20578)

P2-52-a

■ CD Changer Control P.C.BOARD

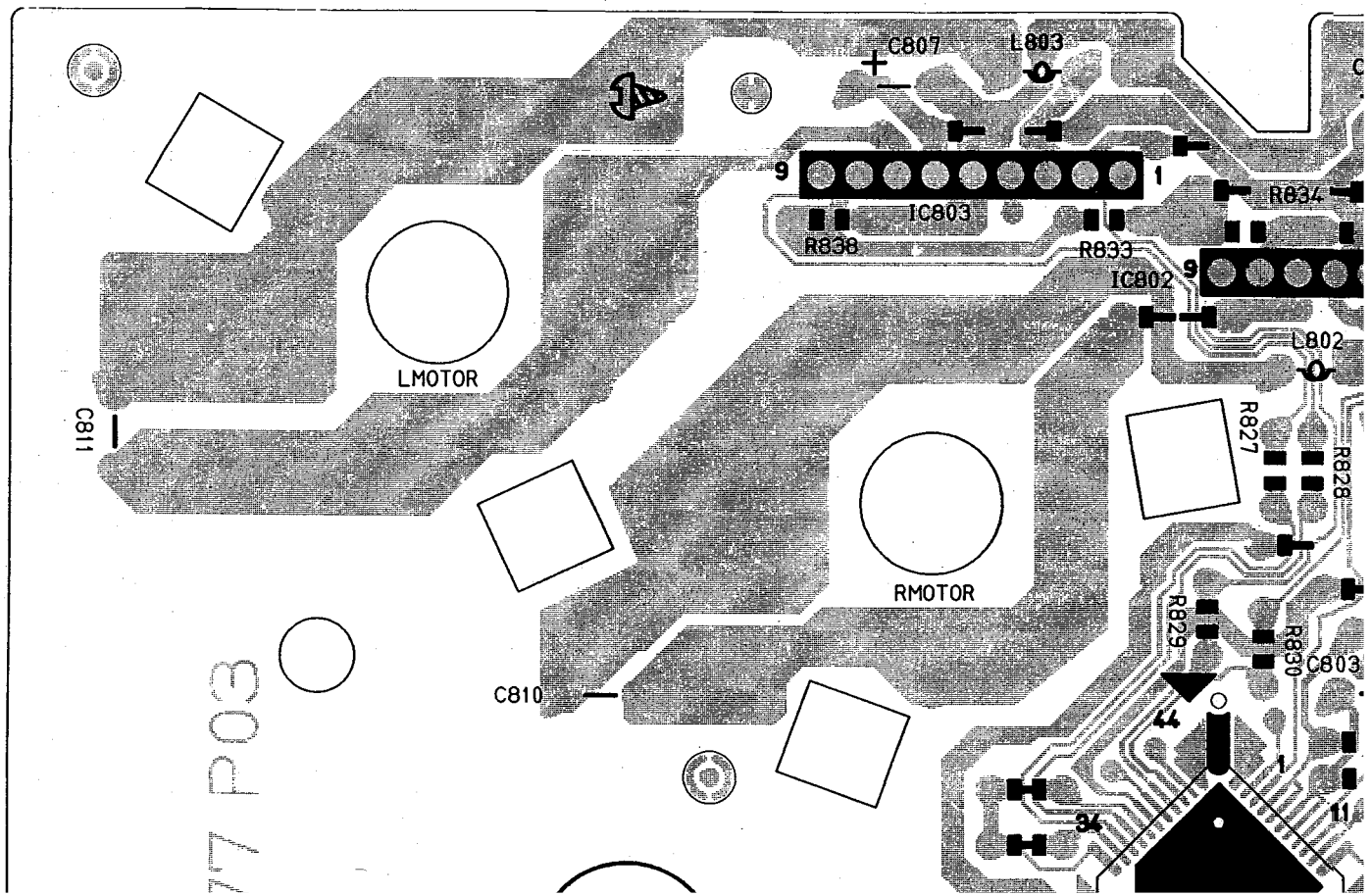

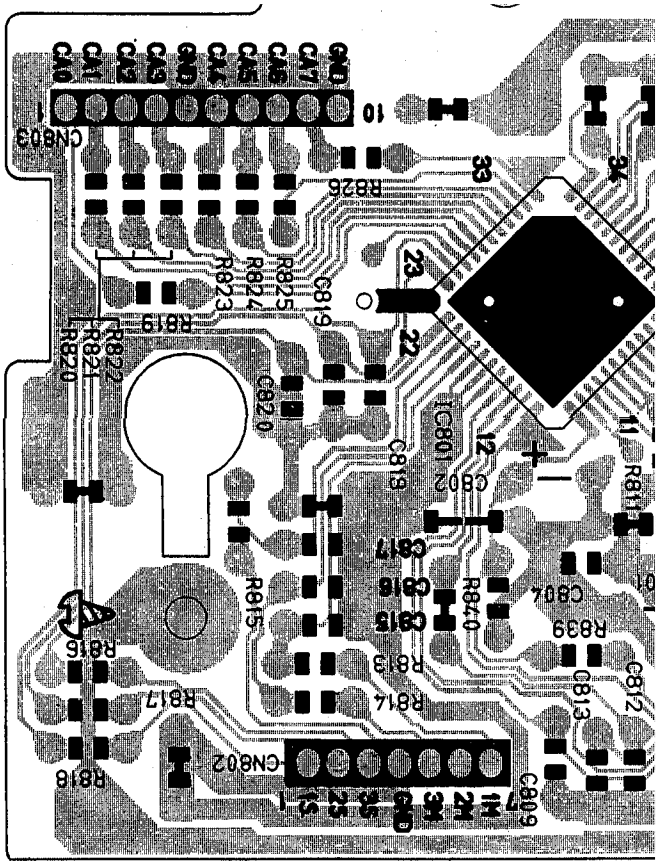
CN803
CN802
IC801
C819
C820
C817
C816
C815
C814
C813
C812
C809
C804
C802
R826
R825
R824
R823
R822
R821
R820
R819
R818
R817
R816
R815
R814
R813
R840
R839
R811
GND
1S
2S
3S
GND
3M
2M
1M

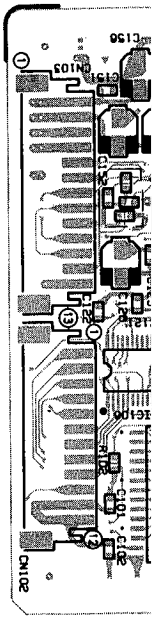
CN103
CN102

■ VIDEO CD P.C. Board (ENV-002)

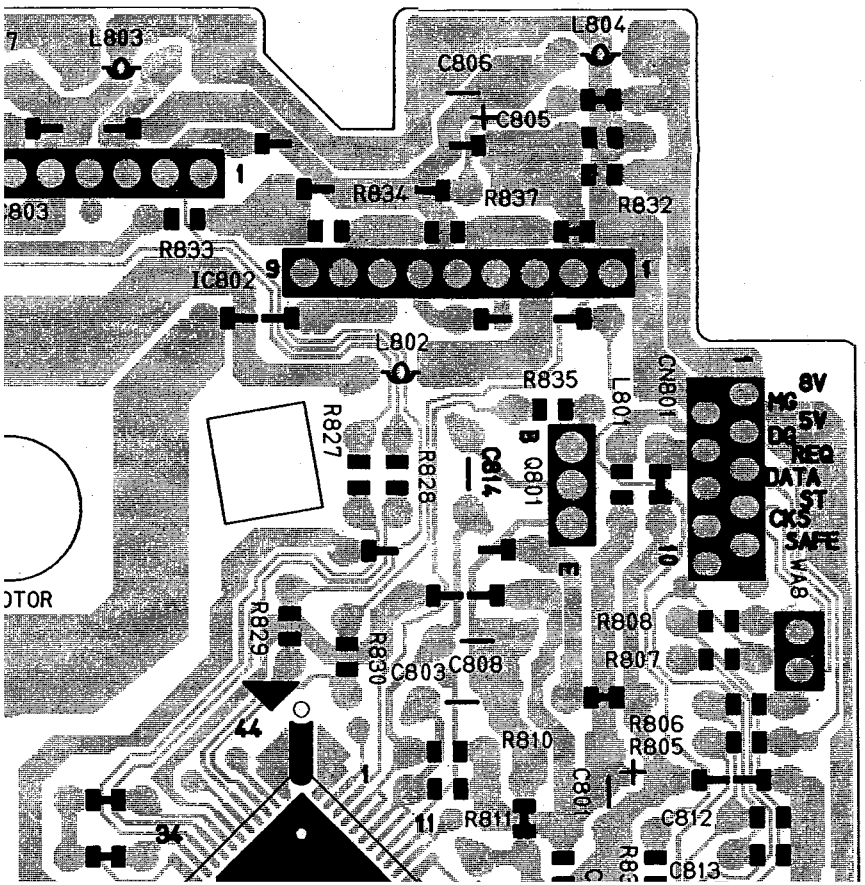

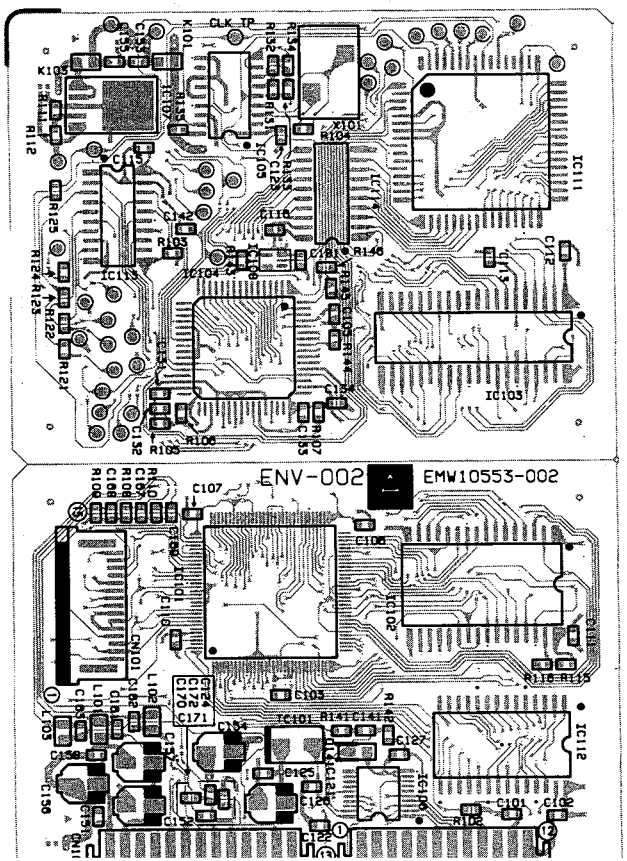

PARTS LIST

* All printed circuit boards and its assemblies are not available as service parts.

The Markes for Dasignated Areas

UB · · · Hong Kong U · · · Universal Type US · · · Singapore UT · · · Taiwan

No markes indicates all areas.

- Contents -

General Exploded View and Parts List · 3-3
Cassette Mechanism Ass'y and Parts List · 3-7
■ Grease Point · 3-7
CD Changer Mechanism Ass'y and Parts List · 3-9
■ Grease Point · 3-9
CD Mechanism Ass'y and Parts List · 3-11
■ Grease Point · 3-11
Electrical Parts List · 3-12
(ENH-271) · 3-12
(ENC-127) · 3-15
(ENB-219) · 3-20
(C3 Mecha.) · 3-22
(ENV-002) · 3-23
Accessories List · 3-23
Packing Materials and Part Numbers · 3-24

General Exploded View and Parts List

Block No. M1MM

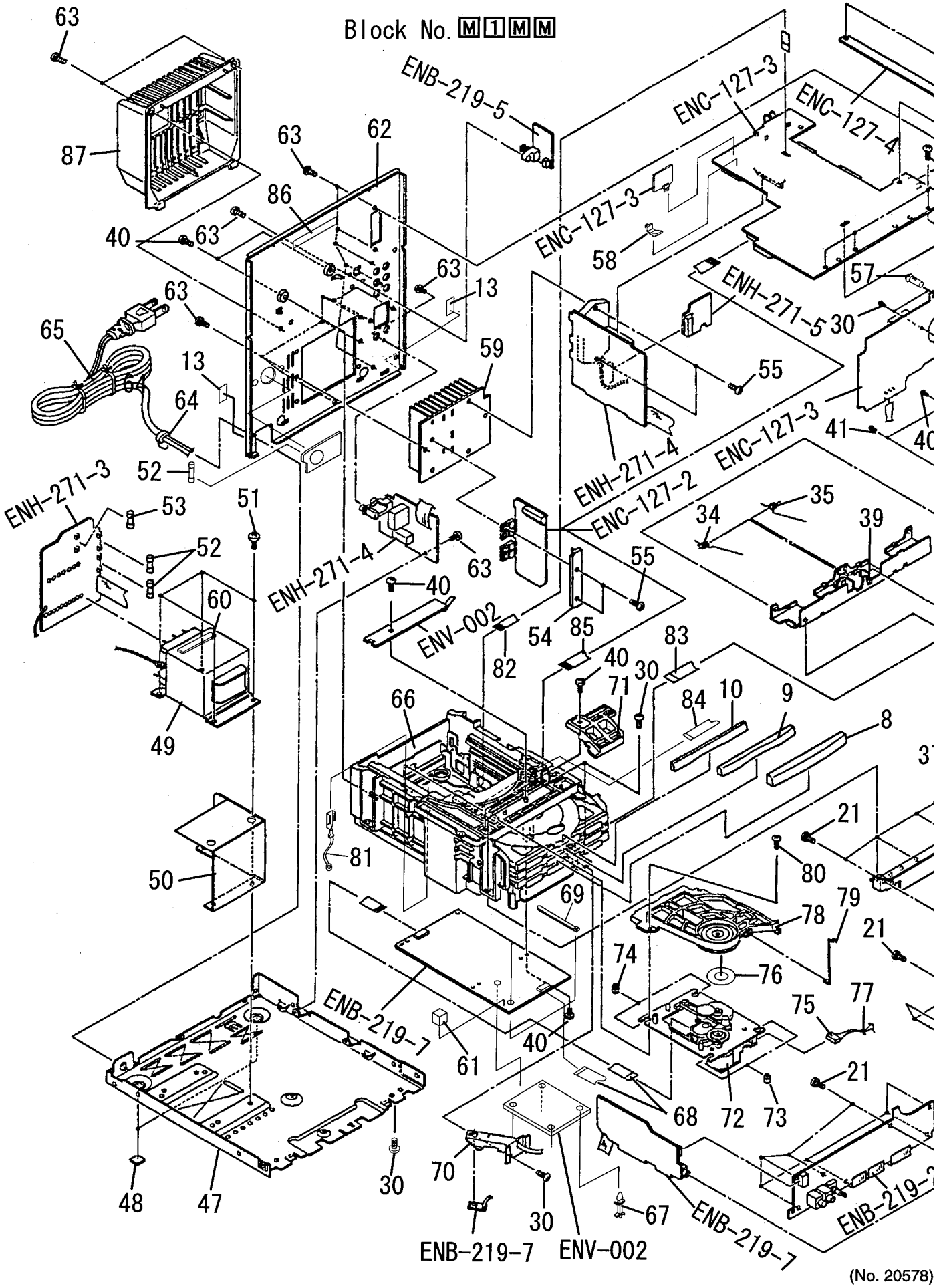

(No. 20578)

CA-V805T

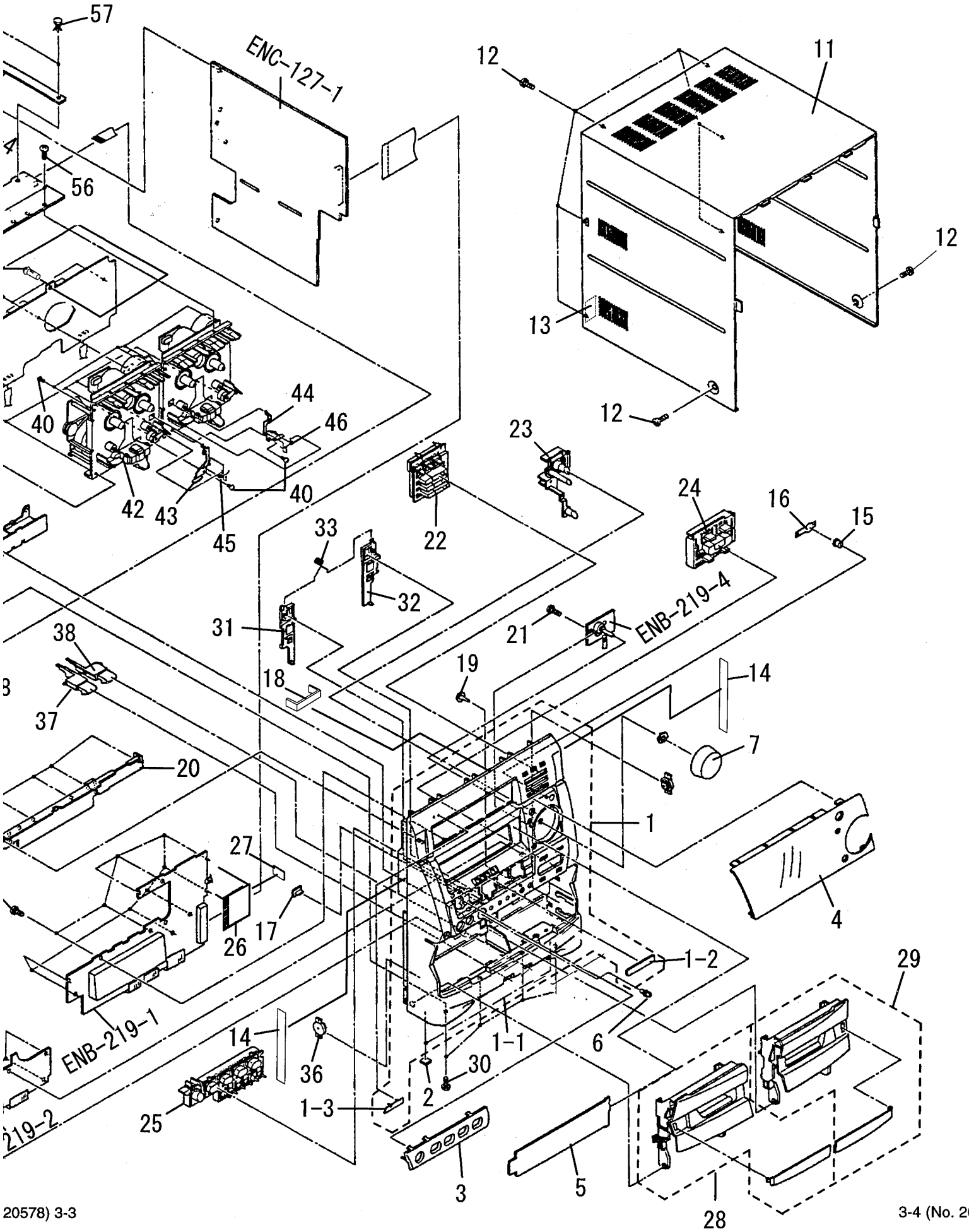
57
ENC-127-1
56
12
11
12
13
12
40
44
46
42
43
40
45
23
22
24
16
15
33
32
31
21
ENB-219-4
38
37
18
19
14
7
20
1
27
17
26
4
1-2
29
ENB-219-1
14
36
1-1
6
30
2
25
1-3
3
5
28

■ Parts List

Block No. M1MM

⚠	Item	Parts Number	Parts Name	Q'ty	Description	Area
	1	EFP-CAV805TU(S)	FRONT PANEL ASSY	1		
	1-1	E103052-013SM	FRONT PANEL	1		
	1-2	E309487-001SM	INDICATOR PLATE	1		
	1-3	E406971-221	JVC MARK	1		
	2	E75896-001	SPACER	2		
	3	E208634-001SM	ORNAMENT PLATE	1		
	4	E208574-009SM	WINDOW SCREEN	1		
	5	E309498-001	FL SCREEN	1		
	6	E408765-003SM	VOLUME KNOB	1		
	7	E309501-002SM	VOLUME KNOB	1		
	8	E208593-002SM	CD FITTING	1		
	9	E208595-002SM	CD FITTING	1		
	10	E208597-002SM	CD FITTING	1		
	11	E103056-003SM	METAL COVER	1		
	12	SDSG3006M	TAPPING SCREW	8		
	13	E306805-164	SPACER	2		
	14	E306805-174	SPACER	2		
	15	E408733-001SM	REMOTE CONTROL WINDOW	1		
	16	E408937-001SM	REMOCON SCREEN	1		
	17	E408759-001SM	POWER INDICATOR	1	POWER	
	18	E408762-001SM	INDICATOR LENS	1	V-CD	
	19	E408760-001SM	INDICATOR LENS	1	REC	
	20	E309495-002SM	STAY BRACKET	1		
	21	SDSF2608Z	SCREW	24		
	22	E208578-002	PUSH BUTTON	1	3-CD	
	23	E208627-001SM	PUSH BUTTON	1	BASS	
	24	E208582-004	PUSH BUTTON	1	STOP	
	25	E208624-001SM	PUSH BUTTON ASSY	1	POWER/SOURCE	
	26	VWF1240-12TTBW	FLAT WIRE ASSY	1		
	27	FMYSA1R2-001	SPACER	1		
	28	E208758-002SM	CASSETTE HOLDER ASSY	1		
	29	E208759-002SM	CASSETTE HOLDER ASSY	1		
	30	SBSG3008Z	TAPPING SCREW	10		
	31	E309479-001SS	EJECT LEVER	1		
	32	E309480-001SS	EJECT LEVER	1		
	33	E408742-001SS	SPRING	1		
	34	E408933-001SS	HOLDER SPRING	1		
	35	E408934-001SS	HOLDER SPRING	1		
	36	VYH7779-00B	DAMPER	2		
	37	E309496-002SM	EJECT BUTTON	1		
	38	E309497-002SM	EJECT BUTTON	1		
	39	E208588-001SS	HOLDER BKT	1		
	40	SBSF3008Z	TAPPING SCREW	11		
	41	SBST3006Z	TAPPING SCREW	4		
	42	----------	CASSETTE MECHANISM ASSY	1	See page	
	43	E309477-222SM	EJECT SAFETY	1		
	44	E309478-222SM	EJECT SAFETY	1		
	45	E407801-002	SPRING	1		
	46	E407802-002	SPRING	1		
	47	E102616-230SM	CHASSIS BASE	1		
	48	E75896-006	FELT SPACER	2		
⚠	49	ETP1100-66FAJ	POWER TRANSFORMER	1		
	50	E408630-001SM	SHIELD PLATE	1		
	51	E65389-002	SPECIAL SCREW	4		
⚠	52	QMF51E2-2R0	FUSE	3	F501/502/002 (T2.0A/250V)	
⚠	53	QMF51E2-4R0	FUSE	1	F001 (T4.0A/250V)	
	54	E407434-001SM	LEAF SPRING	1		

■ Parts List

Block No. M1MM

⚠	Item	Parts Number	Parts Name	Q'ty	Description	Area
	55	SBSG3014CC	SCREW	4		
	56	SBST2604Z	SCREW	3		
	57	FMYH4004-001	RIVET	3		
	58	E309719-001	FASTENER	1		
	59	E309528-003SM	HEAT SINK	1		
	60	E306805-145	SPACER	1		
	61	E306805-175	SPACER	1		
	62	E103054-029SM	REAR PANEL	1		
	63	E73273-003	SPECIAL SCREW	19		
⚠	64	QHS3876-162	CORD STOPPER	1		
⚠	65	QMP39E0-200	POWER CORD	1		US
⚠		QMP5530-0085BS	POWER CORD	1		UB
⚠		QMP7520-200	POWER CORD	1		U UT
	66	----------	CD CHANGER MECHANISM ASSY	1	See page	
	67	E307552-001	FASTENER	4		
	68	VWF1015-09TTAV	FLAT WIRE ASSY	1		
	69	QHX2075-001	TIE BAND	5		
	70	E309526-001SM	TRANSISTOR HOLDER	1		
	71	E309662-001	DISK STOPPER	1		
	72	----------	CD MECHANISM ASSY	1	See page	
	73	FMYH4003-002J	INSULATOR	2		
	74	FMYH4003-001J	INSULATOR	2		
	75	VDM1001-M001A	SOCKET WIRE ASSY	1		
	76	E409347-001	CLAMPER SHEET	1		
	77	VYSA1R2-033	SPACER	1		
	78	VKS3703-00FMM	CLAMPER	1		
	79	VKW5187-001	ROD	1		
	80	SPST2606Z	TAPPING SCREW	1		
	81	EWF102-049	CONNECTOR WIRE ASSY	1		
	82	VWF1207-10TTB	FLAT WIRE ASSY	1		
	83	VWF1210-14TTB	FLAT WIRE ASSY	1		
	84	VWF1211-16TTB	FLAT WIRE ASSY	1		
	85	VWF1215-25TTB	FLAT WIRE ASSY	1		
	86	E406709-001	CAUTION LABEL	1		
	87	E207356-001SM	REAR COVER	1		
	-	E309384-024	RATING LABEL	1		UT
	-	E70891-001	CLASS 1 LABEL	1		
	-	E75139-003	Z LABEL	1		U

Cassette Mechanism Ass'y and Parts List

■ Grease Point

Block No. M2MM

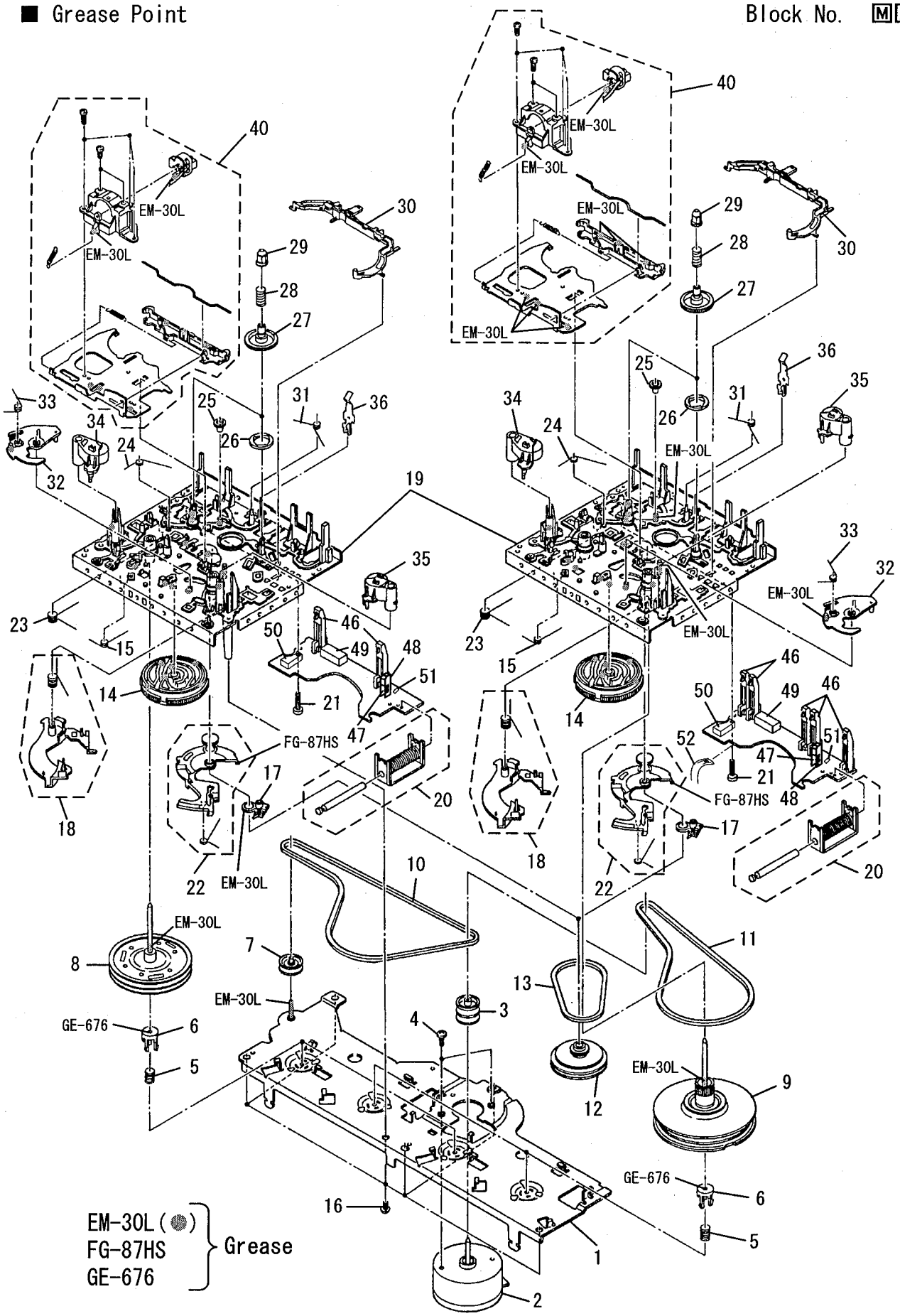

■ Parts List (Cassette Mechanism Ass'y)

Block No. M2MM

⚠	Item	Parts Number	Parts Name	Q'ty	Description	Area
	1	VKM3835-00A	FLYWHEEL BRACKET	1		
	2	MMI-6H2LWK	DC MOTOR	1		
	3	VKR4740-003	MOTOR PULLEY	1		
	4	SPSP2603Z	WOOD SCREW	1		
	5	VKW5177-002	SPRING	1		
	6	VKS5524-001	THRUST GUIDE	1		
	7	VKR4741-002	IDLER PULLEY	1		
	8	VKF3202-00B	F.WHEEL (L) ASY	2		
	9	VKF3200-00B	F.WHEEL (R) ASY	2		
	10	VKB3000-161	CAPSTAN BELT	1		
	11	VKB3000-162	CAPSTAN BELT	1		
	12	VKS5523-00C	MAIN PULLY ASSY	2		
	13	VKB3000-167	REEL BELT	2		
	14	VKS1150-001	CONTROL CAM	2		
	15	VKW5170-002	SPRING	2		
	16	SBSF2608Z	TAPPING SCREW	6		
	17	VKS3719-001	RING	2		
	18	VKS5525-00B	TRIGGER ARM	2		
	19	VKS1151-00A	CHASSIS BASE ASSY	2		
	20	VGP2401-00A	SOLENOID	2		
	21	SDST2612Z	SCREW	2		
	22	VKS3714-00B	F.F/REW.ARM	2		
	23	VKW5173-001	SPRING	2		
	24	VKW5202-002	SPRING	2		
	25	VKS5519-002	IDLER GEAR	2		
	26	VKZ4690-002	MAGNET	2		
	27	VKS3707-002	REEL GEAR	2		
	28	VKW5162-002	SPRING	4		
	29	VKS3708-002	REEL CAP	4		
	30	VKS2261-002	REEL STOPPER	2		
	31	VKW5178-001	BRAKE SPRING	2		
	32	VKS2255-001	DIRECTION LEVER	2		
	33	VKW5163-001	SPRING	2		
	34	VKP4232-00A	PINCH ROLLER	2		
	35	VKP4231-00B	PINCH ROLLER	4		
	36	VKY4670-001	CASSETTE SPRING	2		
	38	VKL7809-00A	BASE PLATE	2		
	39	VKW5167-002	SPRING	2		
	40	VKS3710-00A	H. MOUNT ASY	1		
	40	VKS3725-00A	H. MOUNT ASY	1		
	44	VKS2257-002	ACTION LEVER	2		
	45	VKW5209-003	SPRING	2		
	46	MXS00220MVL0	CASSETTE SWITCH	2		
	47	DN6851-HI	I.C(M)	2		
	48	VKS3630-001MM	I.C.PROTECTOR	2		
	49	VMC0314-P08	CONNECT TERMINAL	1		
	49	VMC0314-P14	CONNECT TERMINAL	1		
	50	QSEC001-E03	LEVER SWITCH	2		
	51	1SR139-400T-32	SI DIODE	2		
	52	VWSC04-11A13K	FLAT WIRE ASSY	1		

Changer Mechanism Ass'y and Parts List

■ Grease Point

Block No. M3MM

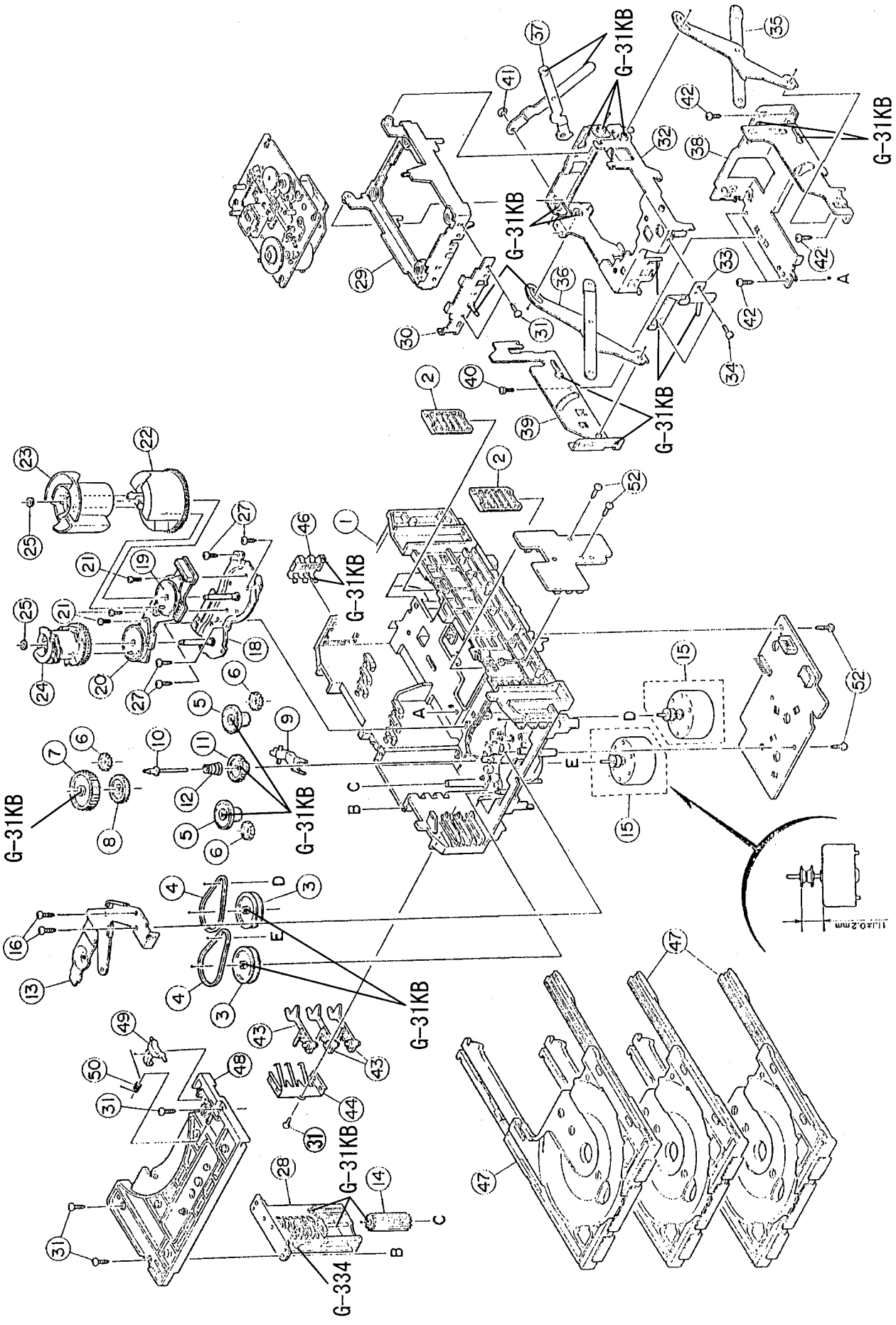

■ Parts List (Changer Mechanism Ass'y)

Block No. M3MM

⚠	Item	Parts Number	Parts Name	Q'ty	Description	Area
	1	VKS1144-002	CHASSIS BASE	1		
	2	VKS3698-001	TRAY GUIDE	2		
	3	VKS5532-001	GEAR	2		
	4	VKB3000-164	DRIVE BELT	2		
	5	VKS5505-001	GEAR	2		
	6	VKS5506-001	GEAR	3		
	7	VKS5507-001	GEAR	1		
	8	VKS5508-001	GEAR	1		
	9	VKS5510-002	SELECT LEVER	1		
	10	VKH5769-001	GEAR STUD	1		
	11	VKS5511-001	GEAR	2		
	12	VKW5155-003	COMPRESS SPRING	2		
	13	VKM3846-001	GEAR BRACKET	2		
	14	VKS5509-001	CYLINDER GEAR	2		
	15	MSN5D257A-SA2	DC MOTOR	3		
	16	DPSP2616Z	SCREW	2		
	18	VKM3825-00A	GEAR BASE	1		
	19	VKZ3172-00A	CAM SWITCH	1		
	20	VKZ3173-00A	CAM SWITCH	1		
	21	SPST2606Z	TAPPING SCREW	1		
	22	VKS2263-001	DRIVING CAM	1		
	23	VKS2264-001	DRIVING CAM	1		
	24	VKS2265-001	SUB GEAR	1		
	25	WDL316050	SLIT WASHER	2		
	27	SBSF2608Z	TAPPING SCREW	4		
	28	VKS3702-00E	DRIVE UNIT	1		
	29	VKS2247-002	MECHA HOLDER	1		
	30	VKL7767-00B	MECHABRACKET	1		
	31	SBSF2606Z	TAPPING SCREW	2		
	32	VKM3824-00D	MECHA HOLDER	1		
	33	VKL7802-00C	MECHA HOLDER	1		
	34	SDST2604Z	SCREW	2		
	35	VKL7810-00A	LIFTER	1		
	36	VKL7811-00A	LIFTER	1		
	37	VKL7812-00A	LIFTER	1		
	38	VKL2732-002	LIFTER BASE	1		
	39	VKM3823-001	LIFTER BRACKET	1		
	40	SDST2604Z	SCREW	1		
	41	WDL266035-2	SLIT WASHER	1		
	42	SBSF2608Z	TAPPING SCREW	8		
	43	VKS5514-001	LOCK LEVER	3		
	44	VKY3133-002	RETURN SPRING	1		
	46	VKY3134-003	SPRING	1		
	47	VKS2252-00C	TRAY	3		
	48	VKS2250-001	TOP BRACKET	1		
	49	VKS5515-001	TRAY STOPPER	1		
	50	VKW5156-002	TORSION SPRING	1		

CD Mechanism Ass'y and Pars List

■ Grease Point

Block No. M4MM

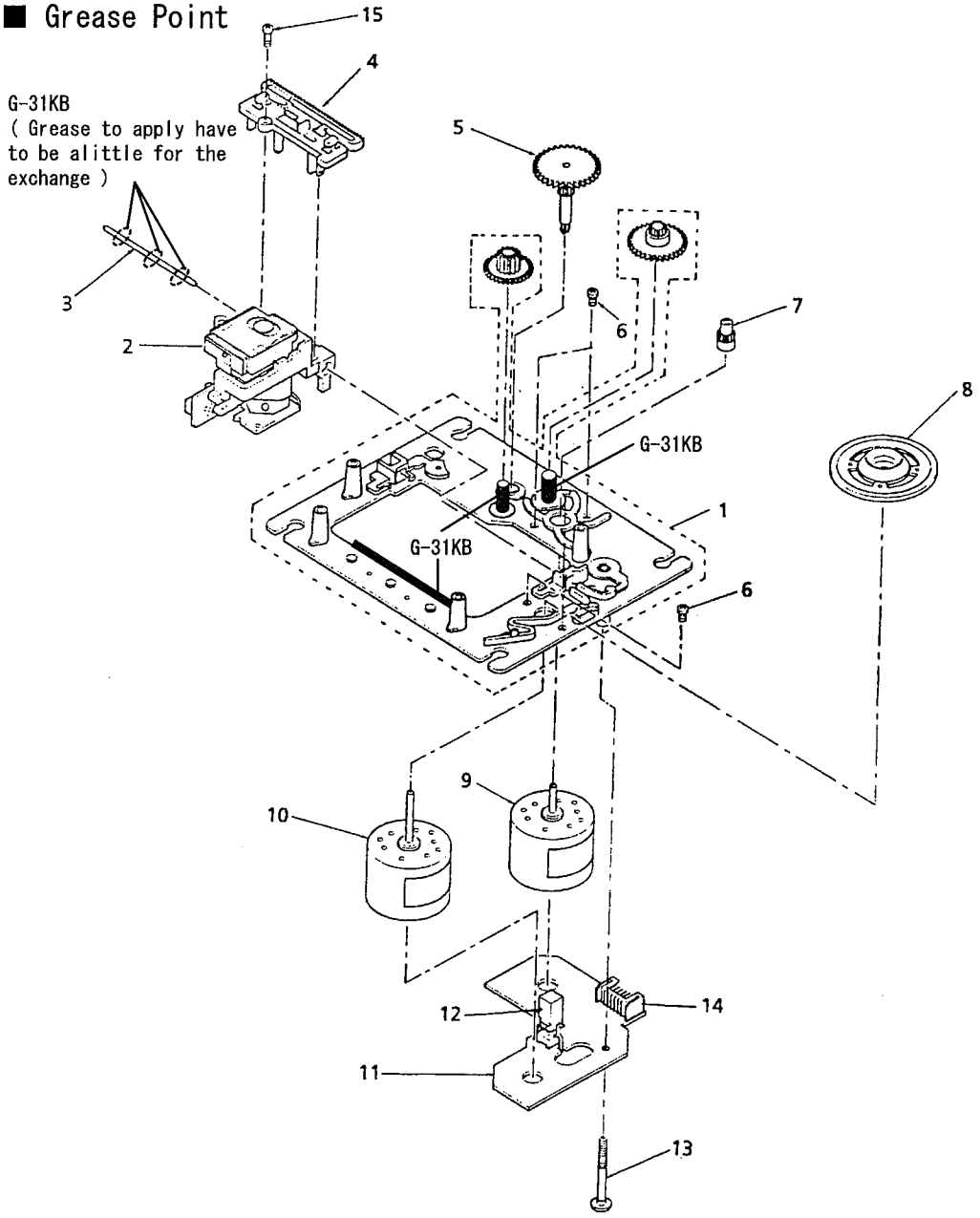

■ Parts List (CD Mechanism Ass'y)

⚠	Item	Parts Number	Parts Name	Q'ty	Description	Area
	1	EPB-002A	MECHANISM BASE ASS'Y	1		
	2	OPTIMA-6S	PICK UP ASS'Y	1		
	3	E406777-001	SHAFT	1		
	4	E307746-001	CD RACK	1		
	5	E307745-221SS	GEAR(3)	1		
	6	SDSP2003N	SCREW	4		
	7	E406750-001	PINION GEAR	1		
	8	EPB309173A	TURN TABLE	1		
	9	E406784-001	FEED MOTOR	1		
	10	E406783-001	SPINDLE MOTOR	1		
	11	EMW10190-001(S)	CIRCUIT BOARD	1		
	12	ESB1100-005	LEAF SWITCH	1		
	13	E75832-001	SCREW	1		
	14	EMV5109-006B	PLUG ASS'Y	1	6PIN	
	15	SDSF2006Z	SCREW	1		

■ Electrical Parts List (ENH-271)

⚠	Item	Parts Number	Description	Area
		I.C.S		
	IC501	STK425-090	I.C(HYBRID)	
	IC841	BP5020	P	
	IC851	HD6433726SC11F	I.C(DIGI-MOS)	
	IC901	HA12136A	I.C(MONO-ANALOG)	
	IC902	BA8221AN	I.C(MONO-ANALOG)	
		DIODES		
⚠	D501	S3V20F	SI.DIODE	
⚠	D502	S3V20F	SI.DIODE	
⚠	D503	S3V20F	SI.DIODE	
⚠	D504	S3V20F	SI.DIODE	
	D541	1SS133	SI.DIODE	
	D542	1SS133	SI.DIODE	
	D543	1SS133	SI.DIODE	
	D801	MTZ24JC	ZENER DIODE	
	D811	1SR35-100	SI.DIODE	
	D812	1SR35-100	SI.DIODE	
	D813	1SR35-100	SI.DIODE	
	D814	1SR35-100	SI.DIODE	
	D815	1SR35-100	SI.DIODE	
	D816	1SR35-100	SI.DIODE	
	D821	MTZ5.1JC	ZENER DIODE	
	D822	1SS133	SI.DIODE	
	D823	1SS133	SI.DIODE	
	D825	1SS133	SI.DIODE	
	D826	1SS133	SI.DIODE	
	D851	1SS133	SI.DIODE	
	D855	1SS133	SI.DIODE	
	D859	1SS133	SI.DIODE	
	D881	MTZ24JC	ZENER DIODE	
	D883	MTZ24JC	ZENER DIODE	
	D890	1SR35-100	SI.DIODE	
	D891	MTZ6.8JC	ZENER DIODE	
	D963	1SR35-100	SI.DIODE	
	D971	1SS133	SI.DIODE	
		TRANSISTORS		
	Q541	2SA970(GR)	SI.TRANSISTOR	
	Q542	2SA970(GR)	SI.TRANSISTOR	
	Q543	2SC1740S(R,S)	SI.TRANSISTOR	
	Q544	2SA970(GR)	SI.TRANSISTOR	
	Q545	2SC2240(GR,BL)	SI.TRANSISTOR	
	Q801	2SC2240(GR,BL)	SI.TRANSISTOR	
	Q821	DTC114YS	DIGITAL TRANSISTOR	
	Q822	DTC114YS	DIGITAL TRANSISTOR	
	Q823	DTC114YS	DIGITAL TRANSISTOR	
	Q831	2SD2144S(VW)	SI.TRANSISTOR	
	Q832	2SD2144S(VW)	SI.TRANSISTOR	
	Q833	DTA114TS	DIGITAL TRANSISTOR	
	Q841	2SC1740(R,S)	SI.TRANSISTOR	
	Q847	DTA144ES	DIGITAL TRANSISTOR	
	Q881	2SC1740S(R,S)	SI.TRANSISTOR	
	Q883	2SC1740S(R,S)	SI.TRANSISTOR	
	Q901	2SC1740S(R,S)	SI.TRANSISTOR	
	Q902	2SC1740S(R,S)	SI.TRANSISTOR	
	Q931	2SD2144S(VW)	SI.TRANSISTOR	
	Q932	2SD2144S(VW)	SI.TRANSISTOR	
	Q933	DTA144ES	DIGITAL TRANSISTOR	
	Q941	2SC1740S(R,S)	SI.TRANSISTOR	
	Q942	2SC1740S(R,S)	SI.TRANSISTOR	
	Q951	2SA933S(RS)	SI.TRANSISTOR	
	Q952	DTC144ES	DIGITAL TRANSISTOR	
	Q961	2SA934(Q,R)	SI.TRANSISTOR	
	Q962	2SA934(Q,R)	SI.TRANSISTOR	
	Q963	DTC123YS	SI.TRANSISTOR	
	Q964	DTC123YS	SI.TRANSISTOR	

⚠	Item	Parts Number	Description	Area
	Q971	DTA114YS	DIGITAL TRANSISTOR	
		CAPACITORS		
	C001	QCS21HJ-470	47PF 50V CER.CAP.	
	C496	QFV81HJ-564	0.56MF 50V THIN FILM CA	
	C497	QFV81HJ-564	0.56MF 50V THIN FILM CA	
⚠	C499	QCZ9019-472	4700PF C.CAP.	
	C500	QFLB1HJ-103	0.01MF 50V MYLAR CAP.	
	C501	QETB1HM-105	1MF 50V AL E.CAP.	
	C502	QETB1HM-105	1MF 50V AL E.CAP.	
	C503	QCBB1HK-101Y	100PF 50V CER.CAP.	
	C504	QCBB1HK-101Y	100PF 50V CER.CAP.	
	C507	QETB1AM-107	100MF 10V AL E.CAP.	
	C508	QETB1AM-107	100MF 10V AL E.CAP.	
	C509	QCSB1HJ-100Y	10PF 50V CER.CAP.	
	C510	QCSB1HJ-100Y	10PF 50V CER.CAP.	
	C515	QCBB1HK-101Y	100PF 50V CER.CAP.	
	C516	QCBB1HK-101Y	100PF 50V CER.CAP.	
	C521	QFV81HJ-104	0.1MF 50V THIN FILM CA	
	C522	QFV81HJ-104	0.1MF 50V THIN FILM CA	
	C527	QETB1JM-107	100MF 63V AL E.CAP.	
	C528	QETB1JM-107	100MF 63V AL E.CAP.	
	C529	QETB2AM-105	1MF 100V E.CAP.	
	C530	QETB2AM-105	1MF 100V E.CAP.	
	C531	QFV81HJ-105	1MF 50V THIN FILM CA	
	C532	QFV81HJ-105	1MF 50V THIN FILM CA	
	C533	QETB1JM-476	47MF 63V AL E.CAP.	
	C534	QETB1JM-476	47MF 63V AL E.CAP.	
	C535	EET5601-228E	2200MF E.CAP.	
	C536	EET5601-228E	2200MF E.CAP.	
	C537	QFV82AJ-104	0.1MF 100V THIN FILM CA	
	C541	QETB1CM-476	47MF 16V AL E.CAP.	
	C542	QETB1EM-106	10MF 25V AL E.CAP.	
	C543	QFV82AJ-104	0.1MF 100V THIN FILM CA	
	C544	QFV82AJ-104	0.1MF 100V THIN FILM CA	
	C547	QFLB1HJ-473	0.047MF 50V MYLAR CAP.	
	C805	QFLB1HJ-223	0.022MF 50V MYLAR CAP.	
	C806	QFLB1HJ-223	0.022MF 50V MYLAR CAP.	
	C811	QETM1VM-228J7	2200MF 35V E.CAP.	
	C812	QETB1VM-477E	470MF 35V AL E.CAP.	
	C813	QETB1VM-477E	470MF 35V AL E.CAP.	
	C814	QFN82AJ-103	0.01MF 100V MYLAR CAP.	
	C821	QETB1HM-225	2.2MF 50V AL E.CAP.	
	C822	QETB1HM-105	1MF 50V AL E.CAP.	
	C841	QETB1HM-225	2.2MF 50V AL E.CAP.	
	C842	QETM0JM-478	4700MF 6.3V E.CAP.	
	C843	QETB1VM-477E	470MF 35V AL E.CAP.	
	C844	QETB0JM-477	470MF 6.3V AL E.CAP.	
	C845	QCZ0202-155	1.5MF 25V CER.RES.	
	C851	QCZ0202-155	1.5MF 25V CER.RES.	
	C852	QETB1CM-476	47MF 16V AL E.CAP.	
	C853	QCVB1CM-103Y	0.01MF 16V CER.CAP.	
	C887	QFLB1HJ-223	0.022MF 50V MYLAR CAP.	
	C888	QFLB1HJ-223	0.022MF 50V MYLAR CAP.	
	C889	QETB0JM-477	470MF 6.3V AL E.CAP.	
	C901	QETB1HM-105	1MF 50V AL E.CAP.	
	C902	QETB1HM-105	1MF 50V AL E.CAP.	
	C907	QETB1EM-106	10MF 25V AL E.CAP.	
	C908	QETB1EM-106	10MF 25V AL E.CAP.	
	C909	QFLB1HJ-473	0.047MF 50V MYLAR CAP.	
	C910	QFLB1HJ-473	0.047MF 50V MYLAR CAP.	
	C911	QETB1HM-105	1MF 50V AL E.CAP.	
	C912	QETB1HM-105	1MF 50V AL E.CAP.	
	C913	QCBB1HK-561Y	560PF 50V CER.CAP.	
	C914	QCBB1HK-561Y	560PF 50V CER.CAP.	
	C915	QETB1HM-105	1MF 50V AL E.CAP.	

■ Electrical Parts List (ENH-271)

⚠	Item	Parts Number	Description	Area
	C916	QETB1HM-105	1MF 50V AL E.CAP.	
	C919	QFV81HJ-224	0.22MF 50V THIN FILM CA	
	C920	QFV81HJ-224	0.22MF 50V THIN FILM CA	
	C921	QER51EM-475	4.7MF 25V E.CAP.	
	C922	QER51EM-475	4.7MF 25V E.CAP.	
	C923	QETB1CM-476	47MF 16V AL E.CAP.	
	C927	QETB1CM-476	47MF 16V AL E.CAP.	
	C941	QFLB1HJ-223	0.022MF 50V MYLAR CAP.	
	C942	QFLB1HJ-223	0.022MF 50V MYLAR CAP.	
	C943	QETB1HM-105	1MF 50V AL E.CAP.	
	C945	QCZ0202-155	1.5MF 25V CER.RES.	
	C946	QCSB1HJ-470	47PF 50V CER.CAP.	
	C947	QCF21HP-103A	0.01MF 50V CER.CAP.	
		RESISTORS		
	R501	QRD161J-102	1K 1/6W CARBON RES.	
	R502	QRD161J-102	1K 1/6W CARBON RES.	
	R503	QRD161J-563	56K 1/6W CARBON RES.	
	R504	QRD161J-563	56K 1/6W CARBON RES.	
⚠	R505	QRD14CJ-471SX	470 1/4W UNF.CARBON R	
⚠	R506	QRD14CJ-471SX	470 1/4W UNF.CARBON R	
	R507	QRD161J-471	470 1/6W CARBON RES.	
	R508	QRD161J-471	470 1/6W CARBON RES.	
	R509	QRD161J-563	56K 1/6W CARBON RES.	
	R510	QRD161J-563	56K 1/6W CARBON RES.	
⚠	R515	QRX014J-R22	0.22 1W METAL FILM R	
⚠	R516	QRX014J-R22	0.22 1W METAL FILM R	
⚠	R517	QRX014J-R22	0.22 1W METAL FILM R	
⚠	R518	QRX014J-R22	0.22 1W METAL FILM R	
⚠	R519	QRD14CJ-100SX	10 1/4W UNF.CARBON R	
⚠	R520	QRD14CJ-100SX	10 1/4W UNF.CARBON R	
	R521	QRD14CJ-4R7SX	4.7 1/4W UNF.CARBON R	
	R522	QRD14CJ-4R7SX	4.7 1/4W UNF.CARBON R	
⚠	R527	QRD14CJ-271S	270 1/4W UNF.CARBON R	
⚠	R528	QRD14CJ-271S	270 1/4W UNF.CARBON R	
⚠	R529	QRD14CJ-101S	100 1/4W UNF.CARBON R	
⚠	R530	QRD14CJ-101S	100 1/4W UNF.CARBON R	
⚠	R531	QRX022J-R68A	0.68 2W METAL FILM R	
⚠	R532	QRX022J-R68A	0.68 2W METAL FILM R	
	R541	QRD161J-122	1.2K 1/6W CARBON RES.	
	R542	QRD161J-122	1.2K 1/6W CARBON RES.	
	R543	QRD167J-223	22K 1/6W CARBON RES.	
	R544	QRD167J-223	22K 1/6W CARBON RES.	
	R545	QRD161J-103	10K 1/6W CARBON RES.	
	R546	QRD161J-103	10K 1/6W CARBON RES.	
	R547	QRD161J-104	100K 1/6W CARBON RES.	
	R548	QRD161J-823	82K 1/6W CARBON RES.	
	R549	QRD161J-104	100K 1/6W CARBON RES.	
	R550	QRD161J-103	10K 1/6W CARBON RES.	
	R551	QRD161J-104	100K 1/6W CARBON RES.	
	R552	QRD161J-103	10K 1/6W CARBON RES.	
	R555	QRG01DJ-562X	5.6K 1W OXIDE METAL	
	R556	QRG01DJ-562X	5.6K 1W OXIDE METAL	
	R801	QRD167J-152	1.5K 1/6W CARBON RES.	
	R802	QRG01DJ-681X	680 1W OXIDE METAL	
	R803	QRG01DJ-681X	680 1W OXIDE METAL	
	R805	QRD14CJ-4R7SX	4.7 1/4W UNF.CARBON R	
	R806	QRD14CJ-4R7SX	4.7 1/4W UNF.CARBON R	
	R821	QRD161J-103	10K 1/6W CARBON RES.	
	R822	QRD161J-102	1K 1/6W CARBON RES.	
	R823	QRD161J-104	100K 1/6W CARBON RES.	
	R825	QRD161J-103	10K 1/6W CARBON RES.	
	R826	QRD161J-103	10K 1/6W CARBON RES.	
	R831	QRD161J-473	47K 1/6W CARBON RES.	
	R832	QRD161J-473	47K 1/6W CARBON RES.	
⚠	R833	QRD14CJ-681SX	680 1/4W UNF.CARBON R	

⚠	Item	Parts Number	Description	Area
⚠	R834	QRD14CJ-681SX	680 1/4W UNF.CARBON R	
⚠	R835	QRD14CJ-681SX	680 1/4W UNF.CARBON R	
⚠	R836	QRD14CJ-681SX	680 1/4W UNF.CARBON R	
	R841	QRD161J-473	47K 1/6W CARBON RES.	
	R842	QRD161J-473	47K 1/6W CARBON RES.	
	R843	QRD14CJ-4R7SX	4.7 1/4W UNF.CARBON R	
	R845	QRD161J-102	1K 1/6W CARBON RES.	
	R846	QRD161J-102	1K 1/6W CARBON RES.	
	R847	QRD161J-102	1K 1/6W CARBON RES.	
	R848	QRD161J-102	1K 1/6W CARBON RES.	
	R851	QRD161J-105	1M 1/6W CARBON RES.	
	R855	QRD161J-103	10K 1/6W CARBON RES.	
	R857	QRD161J-222	2.2K 1/6W CARBON RES.	
	R858	QRD161J-103	10K 1/6W CARBON RES.	
	R859	QRD161J-103	10K 1/6W CARBON RES.	
	R861	QRD161J-103	10K 1/6W CARBON RES.	
	R863	QRD161J-103	10K 1/6W CARBON RES.	
	R864	QRD161J-103	10K 1/6W CARBON RES.	
	R865	QRD161J-103	10K 1/6W CARBON RES.	
	R866	QRD161J-103	10K 1/6W CARBON RES.	
	R867	QRD161J-103	10K 1/6W CARBON RES.	
	R868	QRD161J-103	10K 1/6W CARBON RES.	
	R871	QRD161J-103	10K 1/6W CARBON RES.	
	R872	QRD161J-103	10K 1/6W CARBON RES.	
	R874	QRD161J-103	10K 1/6W CARBON RES.	
	R875	QRD161J-103	10K 1/6W CARBON RES.	
	R876	QRD161J-103	10K 1/6W CARBON RES.	
	R877	QRD161J-103	10K 1/6W CARBON RES.	
	R878	QRD161J-103	10K 1/6W CARBON RES.	
	R879	QRD161J-103	10K 1/6W CARBON RES.	
	R881	QRG01DJ-681X	680 1W OXIDE METAL	
	R882	QRD167J-152	1.5K 1/6W CARBON RES.	
	R883	QRG01DJ-681X	680 1W OXIDE METAL	
	R884	QRD167J-152	1.5K 1/6W CARBON RES.	
⚠	R885	QRG012J-102A	1K 1W OXIDE METAL	
⚠	R886	QRG012J-102A	1K 1W OXIDE METAL	
⚠	R887	QRD14CJ-4R7SX	4.7 1/4W UNF.CARBON R	
⚠	R888	QRD14CJ-4R7SX	4.7 1/4W UNF.CARBON R	
⚠	R891	QRG01DJ-681X	680 1W OXIDE METAL	
⚠	R892	QRG01DJ-681X	680 1W OXIDE METAL	
	R893	QRD161J-103	10K 1/6W CARBON RES.	
	R909	QRD161J-183	18K 1/6W CARBON RES.	
	R910	QRD161J-183	18K 1/6W CARBON RES.	
	R911	QRD161J-132	1.3K 1/6W CARBON RES.	
	R912	QRD161J-132	1.3K 1/6W CARBON RES.	
	R913	QRD161J-163	16K 1/6W CARBON RES.	
	R914	QRD161J-163	16K 1/6W CARBON RES.	
	R922	QRD161J-103	10K 1/6W CARBON RES.	
	R923	QRD161J-105	1M 1/6W CARBON RES.	
	R924	QRD161J-183	18K 1/6W CARBON RES.	
	R925	QRD161J-183	18K 1/6W CARBON RES.	
⚠	R927	QRD14CJ-220S	22 1/4W UNF.CARBON R	
	R931	QRD161J-103	10K 1/6W CARBON RES.	
	R932	QRD161J-103	10K 1/6W CARBON RES.	
	R933	QRD161J-103	10K 1/6W CARBON RES.	
	R934	QRD161J-103	10K 1/6W CARBON RES.	
	R935	QRD161J-103	10K 1/6W CARBON RES.	
	R936	QRD161J-103	10K 1/6W CARBON RES.	
	R937	QRD161J-754	750K 1/6W CARBON RES.	
	R938	QRD161J-754	750K 1/6W CARBON RES.	
	R941	QRD161J-105	1M 1/6W CARBON RES.	
	R942	QRD161J-103	10K 1/6W CARBON RES.	
	R943	QRD161J-105	1M 1/6W CARBON RES.	
	R944	QRD161J-104	100K 1/6W CARBON RES.	
	R945	QRD161J-913	91K 1/6W CARBON RES.	

■ Electrical Parts List (ENH-271)

⚠	Item	Parts Number	Description	Area
	R951	QRD161J-273	27K 1/6W CARBON RES.	
	R952	QRD161J-473	47K 1/6W CARBON RES.	
	R953	QRD161J-473	47K 1/6W CARBON RES.	
	R954	QRD161J-473	47K 1/6W CARBON RES.	
	R955	QRD161J-103	10K 1/6W CARBON RES.	
	R961	QRD161J-471	470 1/6W CARBON RES.	
	R962	QRD161J-471	470 1/6W CARBON RES.	
	R963	QRD161J-101	100 1/6W CARBON RES.	
	R964	QRD161J-101	100 1/6W CARBON RES.	
⚠	R965	QRX022J-3R3A	3.3 2W METAL FILM R	
⚠	R966	QRX022J-3R3A	3.3 2W METAL FILM R	
	R971	QRD161J-104	100K 1/6W CARBON RES.	
	R972	QRD161J-274	270K 1/6W CARBON RES.	
	R980	QRD161J-274	270K 1/6W CARBON RES.	
	R981	QRD161J-103	10K 1/6W CARBON RES.	
	R982	QRD161J-104	100K 1/6W CARBON RES.	
	R983	QRD161J-104	100K 1/6W CARBON RES.	
	R984	QRD161J-104	100K 1/6W CARBON RES.	
	R1006	QRD161J-473	47K 1/6W CARBON RES.	
	VR951	QVPA603-103A	10K TRIMMER RES.	
		OTHERS		
		EMW10558-004	PRINTED BOARD	
		E309594-001SM	SHIELD BRACKET	
		E67132-T2R0	FUSE LABEL	
		E67132-T4R0	FUSE LABEL	
	J801	EMB10TV-401BJ4	SPEAKER TERMINAL	
	J881	EMN00TV-225A	PIN JACK	
	J882	EMN00TV-117A	PIN JACK	
	K501	ENZ8101-007	INDUCTOR	
	K502	ENZ8101-007	INDUCTOR	
	K503	ENZ8101-007	INDUCTOR	
	K504	ENZ8101-007	INDUCTOR	
	L519	EQL0011-R45J1	INDUCTOR	
	L520	EQL0011-R45J1	INDUCTOR	
	L531	EQL1002-100	INDUCTOR	
	L532	EQL1002-100	INDUCTOR	
	L601	EQL4004-1R0	INDUCTOR	
	S001	QSR8001-E01U	ROTARY SWITCH	
	X851	ECX0008-000KMZ	CRYSTAL	
	CN311	VMC0314-S08	CONNECT TERMINAL	
	CN312	VMC0314-S08	CONNECT TERMINAL	
	CN313	VMC0314-S14	CONNECT TERMINAL	
	CN314	VMC0314-S08	CONNECT TERMINAL	
	CN412	EWS293-0122	SOCKET WIRE ASSY	
	CN501	EMV5163-015R	CONNECT TERMINAL	
	CN503	EMV7167-016R	CONNECT TERMINAL	
	CN504	EMV7167-028R	CONNECT TERMINAL	
	CN505	EMV7155-115R	CONNECT TERMINAL	
	CN511	EMV7163-015	CONNECT TERMINAL	
	CN512	EMV5125-011	MALE CONNECTOR	
	CN521	EMV5163-008R	CONNECT TERMINAL	
	CN531	EMV7163-008	CONNECT TERMINAL	
	CN555	EMV7124-005	CONNECT TERMINAL	
	CN556	EMV5122-005R	CONNECT TERMINAL	
	CN613	EMV7160-007	CONNECT TERMINAL	
	CN614	EMV7160-011	CONNECT TERMINAL	
	CN811	VMC0163-R10	CONNECT TERMINAL	
	CN901	VMC0107-R09	CONNECT TERMINAL	
	EP801	E409182-001SM	EARTH TERMINAL	
	FS555	E3400-431	FELT SPACER	
	FS556	E3400-431	FELT SPACER	
	FT001	VMZ0087-001Z	FUSE HOLDER	
	FT002	VMZ0087-001Z	FUSE HOLDER	
	FT003	VMZ0087-001Z	FUSE HOLDER	
	FT004	VMZ0087-001Z	FUSE HOLDER	

⚠	Item	Parts Number	Description	Area
	FT005	VMZ0087-001Z	FUSE HOLDER	
	FT006	VMZ0087-001Z	FUSE HOLDER	
	FT007	VMZ0087-001Z	FUSE HOLDER	
	FT008	VMZ0087-001Z	FUSE HOLDER	
	FW501	EWR39D-20SS	FLAT WIRE ASSY	
	FW581	EWR35B-16SST	FLAT WIRE ASSY	
	FW583	EWR37D-10SS	FLAT WIRE ASSY	
	FW801	EWR3AD-16SS	FLAT WIRE ASSY	
	JW001	QWE886-24RR	VINYL WIRE	
	JW002	QWE884-26RR	VINYL WIRE	
	JW003	QWE889-24RR	VINYL WIRE	
	JW004	QWE882-24RR	VINYL WIRE	
	JW005	QWE883-24RR	VINYL WIRE	
	JW006	QWE881-26RR	VINYL WIRE	
	JW801	QWE350-14RR	VINYL WIRE	
	RY801	ESK7D24-213R	RELAY	
	RY881	ESK7D24-213R	RELAY	
	RY883	ESK7D24-213R	RELAY	
	SP851	VYH7653-001	SPRING	
	TB001	EMZ4001-001	TAB	
	TB002	EMZ4001-001	TAB	
	TW101	EWT011-178	TERMINAL WIRE	
	TW501	EWT011-175	TERMINAL WIRE ASSY	

■ Electrical Parts List (ENC-127)

⚠	Item	Parts Number	Description	Area
		I.C.S		
	IC081	TC9409F-000	I.C(DIGI-MOS)	
	IC102	LA1836M	I.C(MONO-ANALOG)	
	IC103	MC13028M	I.C(M)	
	IC121	LC72131M	I.C(M)	
	IC301	BA15218N	I.C(MONO-ANALOG)	
	IC302	BA15218N	I.C(MONO-ANALOG)	
	IC303	BA15218N	I.C(MONO-ANALOG)	
	IC304	BA3126N	I.C(MONO-ANALOG)	
	IC401	TC9163N	I.C(DIGI-MOS)	
	IC411	BA15218N	I.C(MONO-ANALOG)	
	IC441	TDA7319	I.C(M)	
	IC461	NJM4580DD	I.C(MONO-ANALOG)	
	IC471	BA15218N	I.C(MONO-ANALOG)	
	IC481	UPD7001C	I.C(MONO-ANALOG)	
		DIODES		
	D091	MTZ2.0JAT-77	ZENER DIODE	
	D092	MTZ3.0JAT-77	ZENER DIODE	
	D121	1SS133	SI.DIODE	
	D126	1SS133	SI.DIODE	
	D127	1SS133	SI.DIODE	
	D129	1SS133	SI.DIODE	
	D130	1SS133	SI.DIODE	
	D142	MA700	SI.DIODE	
	D182	1SS133	SI.DIODE	
	D183	1SS133	SI.DIODE	
	D190	1SS133	SI.DIODE	
	D290	1SS133	SI.DIODE	
	D441	MTZ10JC	ZENER DIODE	
	D479	1SS133	SI.DIODE	
	D480	1SS133	SI.DIODE	
	D481	1SS133	SI.DIODE	
	D495	MTZ8.2JC	ZENER DIODE	
	D498	1SS133	SI.DIODE	
	D499	1SS133	SI.DIODE	
	D561	MTZ10JC	ZENER DIODE	
	D562	1SS254	DIODE	
	D563	1SS254	DIODE	
	D564	1SS254	DIODE	
	D565	MTZ6.8JC	ZENER DIODE	
	D566	MTZ9.1JC	ZENER DIODE	
	D567	MTZ13JC	ZENER DIODE	
	D568	MTZ13JC	ZENER DIODE	
	D581	MTZ33JC	ZENER DIODE	
	D582	1SR35-100	SI.DIODE	
	D583	1SR35-100	SI.DIODE	
	D586	MTZ7.5JC	ZENER DIODE	
		TRANSISTORS		
	Q101	2SC461	SI.TRANSISTOR	
	Q102	2SC535	SI.TRANSISTOR	
	Q103	2SC461	SI.TRANSISTOR	
	Q121	DTA124ES	DIGITAL TRANSISTOR	
	Q122	DTA124ES	DIGITAL TRANSISTOR	
	Q141	DTC114ES	DIGITAL TRANSISTOR	
	Q142	DTC114ES	DIGITAL TRANSISTOR	
	Q143	DTC114ES	DIGITAL TRANSISTOR	
	Q190	DTA124ES	DIGITAL TRANSISTOR	
	Q195	2SD2144S(VW)	SI.TRANSISTOR	
	Q196	2SD2144S(VW)	SI.TRANSISTOR	
	Q197	2SC1740S(R,S)	SI.TRANSISTOR	
	Q198	2SC1740S(R,S)	SI.TRANSISTOR	
	Q199	DTA124ES	DIGITAL TRANSISTOR	
	Q301	2SD2144S(VW)	SI.TRANSISTOR	
	Q302	2SD2144S(VW)	SI.TRANSISTOR	
	Q303	2SC1740S(R,S)	SI.TRANSISTOR	
	Q304	2SC1740S(R,S)	SI.TRANSISTOR	
	Q305	2SC1740S(R,S)	SI.TRANSISTOR	

⚠	Item	Parts Number	Description	Area
	Q306	2SC1740S(R,S)	SI.TRANSISTOR	
	Q309	DTC144TS	DIGITAL TRANSISTOR	
	Q310	DTC144TS	DIGITAL TRANSISTOR	
	Q326	2SC1740S(R,S)	SI.TRANSISTOR	
	Q327	2SC1740S(R,S)	SI.TRANSISTOR	
	Q328	2SC1740S(R,S)	SI.TRANSISTOR	
	Q329	2SC1740S(R,S)	SI.TRANSISTOR	
	Q341	2SC1740S(R,S)	SI.TRANSISTOR	
	Q342	2SC1740S(R,S)	SI.TRANSISTOR	
	Q451	2SD2144S(VW)	SI.TRANSISTOR	
	Q452	2SD2144S(VW)	SI.TRANSISTOR	
	Q455	DTA144ES	DIGITAL TRANSISTOR	
	Q491	DTC114YS	DIGITAL TRANSISTOR	
	Q492	DTC114YS	DIGITAL TRANSISTOR	
	Q495	2SD400MP(E,F)	SI.TRANSISTOR	
	Q561	2SC1740S(R,S)	SI.TRANSISTOR	
	Q562	2SA933S(RS)	SI.TRANSISTOR	
	Q563	2SB1187(F,G)	SI.TRANSISTOR	
	Q564	2SC1740S(R,S)	SI.TRANSISTOR	
	Q565	2SD2061(F,G)	SI.TRANSISTOR	
	Q567	2SC1740S(R,S)	SI.TRANSISTOR	
	Q568	2SD2061(F,G)	SI.TRANSISTOR	
	Q569	2SC1740S(R,S)	SI.TRANSISTOR	
	Q570	2SD2061(F,G)	SI.TRANSISTOR	
	Q571	2SB1187(F,G)	SI.TRANSISTOR	
	Q572	DTA144ES	DIGITAL TRANSISTOR	
	Q575	DTC144ES	DIGITAL TRANSISTOR	
	Q576	DTA144ES	DIGITAL TRANSISTOR	
	Q577	DTA144ES	DIGITAL TRANSISTOR	
	Q578	DTC144ES	DIGITAL TRANSISTOR	
	Q581	2SA934(Q,R)	SI.TRANSISTOR	
		CAPACITORS		
	C021	QETB1HM-475E	4.7MF 50V E.CAP.	
	C023	QFLB1HJ-472	4700PF 50V MYLAR CA	
	C027	QCBB1HK-102Y	1000PF 50V CER.CAP.	
	C029	QCVB1CM-103Y	0.01MF 16V CER.CAP.	
	C030	QETB1AM-476	47MF 10V E.CAP.	
	C031	QER51EM-475	4.7MF 25V E.CAP.	
	C032	QER51EM-475	4.7MF 25V E.CAP.	
	C033	QFLB1HJ-222	2200PF 50V MYLAR CA	
	C034	QFLB1HJ-222	2200PF 50V MYLAR CA	
	C037	QCBB1HK-331Y	330PF 50V CER.CAP.	
	C038	QCBB1HK-331Y	330PF 50V CER.CAP.	
	C039	QCVB1CM-103Y	0.01MF 16V CER.CAP.	
	C040	QETB1AM-107	100MF 10V AL E.CA	
	C058	QCVB1CM-103Y	0.01MF 16V CER.CAP.	
	C059	QETB1AM-107	100MF 10V AL E.CA	
	C071	QETB1AM-107	100MF 10V AL E.CA	
	C072	QETB1AM-107	100MF 10V AL E.CA	
	C073	QCVB1CM-103Y	0.01MF 16V CER.CAP.	
	C074	QCVB1CM-103Y	0.01MF 16V CER.CAP.	
	C075	QETB1AM-107	100MF 10V AL E.CA	
	C076	QCVB1CM-103Y	0.01MF 16V CER.CAP.	
	C077	QETB1AM-107	100MF 10V AL E.CA	
	C078	QCVB1CM-103Y	0.01MF 16V CER.CAP.	
	C079	QETB1AM-107	100MF 10V AL E.CA	
	C080	QCVB1CM-103Y	0.01MF 16V CER.CAP.	
	C081	QCS31HJ-6R0Z	6PF 50V CER.CAP.	
	C082	QCS31HJ-6R0Z	6PF 50V CER.CAP.	
	C086	QCVB1CM-103Y	0.01MF 16V CER.CAP.	
	C088	QCFB1HZ-104Y	0.1MF 50V CER.CAP.	
	C089	QCBB1HK-561Y	560PF 50V CER.CAP.	
	C101	QCF21HP-103A	0.01MF 50V CER.CAP.	
	C102	QETB1EM-476	47MF 25V AL E.CA	
	C103	QCF21HP-223A	0.022MF 50V CER.CAP.	
	C104	QCHB1EZ-223	0.022MF 25V CER.CAP.	
	C105	QCHB1EZ-223	0.022MF 25V CER.CAP.	

■ Electrical Parts List (ENC-127)

⚠	Item	Parts Number	Description	Area
	C107	QCHB1EZ-223	0.022MF 25V CER.CAP.	
	C111	QCHB1EZ-223	0.022MF 25V CER.CAP.	
	C112	QCT30CH-120Y	12PF 50V CER.CAP.	
	C113	QCC21EM-473	0.047MF 25V CER.CAP.	
	C121	QCT30CH-180Y	18PF 50V CER.CAP.	
	C122	QCT30CH-180Y	18PF 50V CER.CAP.	
	C123	QCC21EM-473	0.047MF 25V CER.CAP.	
	C124	QCS21HJ-101A	100PF 50V CER.CAP.	
	C126	QCBB1HK-101Y	100PF 50V CER.CAP.	
	C128	QFV71HJ-474ZM	0.47MF 50V THIN FIL	
	C129	QCBB1HK-102Y	1000PF 50V CER.CAP.	
	C130	QETB1CM-227	220MF 16V AL E.CA	
	C131	QCXB1CM-472Y	4700PF 16V CER.CAP.	
	C132	QCXB1CM-472Y	4700PF 16V CER.CAP.	
	C141	QCC21EM-473	0.047MF 25V CER.CAP.	
	C142	QETB1HM-106	10MF 50V E.CAP.	
	C143	QCHB1EZ-223	0.022MF 25V CER.CAP.	
	C144	QCC21EM-223	0.022MF 25V CER.CAP.	
	C145	QETB1HM-475E	4.7MF 50V E.CAP.	
	C146	QETB1HM-106	10MF 50V E.CAP.	
	C147	QETB1HM-105	1MF 50V AL E.CA	
	C148	QETB1HM-474	0.47MF 50V E.CAP.	
	C149	QETB1HM-105	1MF 50V AL E.CA	
	C150	QETC1HM-225ZN	2.2MF 50V AL E.CA	
	C153	QCY31HK-821Z	820PF 50V CER.CAP.	
	C154	QCXB1CM-472Y	4700PF 16V CER.CAP.	
	C155	QETB1EM-476	47MF 25V AL E.CA	
	C156	QCHB1EZ-223	0.022MF 25V CER.CAP.	
	C157	QCF21HP-473A	0.047MF 50V CER.CAP.	
	C158	QETB1HM-106	10MF 50V E.CAP.	
	C159	QFLB1HJ-333	0.033MF 50V MYLAR CA	
	C160	QFLB1HJ-333	0.033MF 50V MYLAR CA	
	C161	QETB1HM-225	2.2MF 50V AL E.CA	
	C162	QETB1HM-225	2.2MF 50V AL E.CA	
	C163	QETB1EM-106	10MF 25V AL E.CA	
	C164	QCVB1CM-103Y	0.01MF 16V CER.CAP.	
	C165	QCHB1EZ-223	0.022MF 25V CER.CAP.	
	C167	QFLB1HJ-102	1000PF 50V MYLAR CA	
	C168	QFV81HJ-274	0.27MF 50V THIN FIL	
	C169	QCZ0205-155	1.5MF 25V C.CAP.	
	C170	QETB1HM-106	10MF 50V E.CAP.	
	C171	QFV71HJ-474ZM	0.47MF 50V THIN FIL	
	C172	QETB1HM-106	10MF 50V E.CAP.	
	C173	QETB1EM-226N	22MF 25V E.CAP.	
	C174	QETB1HM-106	10MF 50V E.CAP.	
	C175	QETB1HM-474	0.47MF 50V E.CAP.	
	C176	QFV81HJ-224	0.22MF 50V THIN FIL	
	C177	QCT25CH-470Z	47PF 50V CER.CAP.	
	C178	QETB1EM-476	47MF 25V AL E.CA	
	C179	QCHB1EZ-223	0.022MF 25V CER.CAP.	
	C180	QETB1EM-226N	22MF 25V E.CAP.	
	C181	QFLB1HJ-562	5600PF 50V MYLAR CA	
	C182	QFLB1HJ-562	5600PF 50V MYLAR CA	
	C185	QETB1HM-225	2.2MF 50V AL E.CA	
	C186	QETB1HM-225	2.2MF 50V AL E.CA	
	C191	QETB1HM-225	2.2MF 50V AL E.CA	
	C192	QETB1HM-225	2.2MF 50V AL E.CA	
	C193	QCHB1EZ-223	0.022MF 25V CER.CAP.	
	C301	QETB1HM-225	2.2MF 50V AL E.CA	
	C302	QETB1HM-225	2.2MF 50V AL E.CA	
	C303	QETB1HM-225	2.2MF 50V AL E.CA	
	C304	QETB1HM-225	2.2MF 50V AL E.CA	
	C305	QCBB1HK-101Y	100PF 50V CER.CAP.	
	C306	QCBB1HK-101Y	100PF 50V CER.CAP.	
	C307	QCBB1HK-181Y	180PF 50V CER.CAP.	
	C308	QCBB1HK-181Y	180PF 50V CER.CAP.	
	C309	QETB1EM-106	10MF 25V AL E.CA	

⚠	Item	Parts Number	Description	Area
	C310	QETB1EM-106	10MF 25V AL E.CA	
	C311	QCSB1HJ-470	47PF 50V CER.CAP.	
	C312	QCSB1HJ-470	47PF 50V CER.CAP.	
	C313	QETB1CM-476	47MF 16V AL E.CA	
	C314	QETB1CM-476	47MF 16V AL E.CA	
	C315	QETB1HM-105	1MF 50V AL E.CA	
	C316	QETB1HM-105	1MF 50V AL E.CA	
	C317	QETB1EM-106	10MF 25V AL E.CA	
	C318	QETB1CM-107	100MF 16V AL E.CA	
	C320	QFLB1HJ-682	6800PF 50V MYLAR CA	
	C321	QFLB1HJ-332	3300PF 50V MYLAR CA	
	C322	QFLB1HJ-332	3300PF 50V MYLAR CA	
	C323	QFLB1HJ-183	0.018MF 50V MYLAR CA	
	C324	QFP31HG-472	4700PF 50V POLYPROP	
	C325	QCBB1HK-101Y	100PF 50V CER.CAP.	
	C326	QCBB1HK-101Y	100PF 50V CER.CAP.	
	C331	QCXB1CM-152Y	1500PF 16V CER.CAP.	
	C332	QCXB1CM-152Y	1500PF 16V CER.CAP.	
	C333	QFLB1HJ-333	0.033MF 50V MYLAR CA	
	C334	QFLB1HJ-333	0.033MF 50V MYLAR CA	
	C347	QFLB1HJ-682	6800PF 50V MYLAR CA	
	C348	QFLB1HJ-682	6800PF 50V MYLAR CA	
	C349	QFLB1HJ-103	0.01MF 50V MYLAR CA	
	C350	QFLB1HJ-103	0.01MF 50V MYLAR CA	
	C353	QCY21HK-392	3900PF 50V CER.CAP.	
	C354	QCY21HK-392	3900PF 50V CER.CAP.	
	C355	QFN81HJ-822	8200PF 50V METAL.MY	
	C356	QFN81HJ-822	8200PF 50V METAL.MY	
	C361	QCF21HP-473A	0.047MF 50V CER.CAP.	
	C362	QCF21HP-473A	0.047MF 50V CER.CAP.	
	C365	QEK51HM-226	22MF 50V AL E.CA	
	C366	QEK51HM-226	22MF 50V AL E.CA	
	C367	QFLB1HJ-682	6800PF 50V MYLAR CA	
	C368	QFLB1HJ-682	6800PF 50V MYLAR CA	
	C369	QETB1AM-107	100MF 10V AL E.CA	
	C370	QETB1AM-107	100MF 10V AL E.CA	
	C371	QETB1HM-225	2.2MF 50V AL E.CA	
	C372	QETB1HM-225	2.2MF 50V AL E.CA	
	C373	QETB1CM-476	47MF 16V AL E.CA	
	C374	QETB1CM-476	47MF 16V AL E.CA	
	C375	QCBB1HK-101Y	100PF 50V CER.CAP.	
	C376	QCBB1HK-101Y	100PF 50V CER.CAP.	
	C377	QCXB1CM-122	1200PF 16V POLYPROP	
	C378	QCXB1CM-122	1200PF 16V POLYPROP	
	C379	QCBB1HK-331Y	330PF 50V CER.CAP.	
	C380	QCBB1HK-331Y	330PF 50V CER.CAP.	
	C381	QETB1CM-476	47MF 16V AL E.CA	
	C385	QFLB1HJ-682	6800PF 50V MYLAR CA	
	C386	QFLB1HJ-682	6800PF 50V MYLAR CA	
	C387	QETB1AM-107	100MF 10V AL E.CA	
	C388	QETB1AM-107	100MF 10V AL E.CA	
	C389	QETB1HM-225	2.2MF 50V AL E.CA	
	C390	QETB1HM-225	2.2MF 50V AL E.CA	
	C391	QETB1CM-107	100MF 16V AL E.CA	
	C392	QETB1CM-107	100MF 16V AL E.CA	
	C393	QCBB1HK-101Y	100PF 50V CER.CAP.	
	C394	QCBB1HK-101Y	100PF 50V CER.CAP.	
	C395	QCBB1HK-331Y	330PF 50V CER.CAP.	
	C396	QCBB1HK-331Y	330PF 50V CER.CAP.	
	C397	QCBB1HK-391Y	390PF 50V CER.CAP.	
	C398	QCBB1HK-391Y	390PF 50V CER.CAP.	
	C401	QCHB1EZ-223	0.022MF 25V CER.CAP.	
	C411	QETB1EM-226N	22MF 25V E.CAP.	
	C412	QETB1EM-226N	22MF 25V E.CAP.	
	C415	QETB1HM-475E	4.7MF 50V E.CAP.	
	C416	QETB1HM-475E	4.7MF 50V E.CAP.	
	C417	QETB1CM-476	47MF 16V AL E.CA	

■ Electrical Parts List (ENC-127)

⚠	Item	Parts Number	Description	Area
	C418	QETB1CM-476	47MF 16V AL E.CA	
	C421	QCXB1CM-222Y	2200PF 16V CER.CAP.	
	C422	QCXB1CM-222Y	2200PF 16V CER.CAP.	
	C425	QETB1HM-225	2.2MF 50V AL E.CA	
	C426	QETB1HM-225	2.2MF 50V AL E.CA	
	C429	QETB1EM-107	100MF 25V AL E.CA	
	C430	QETB1EM-107	100MF 25V AL E.CA	
	C441	QCXB1CM-272Y	2700PF 16V CER.CAP.	
	C442	QCXB1CM-272Y	2700PF 16V CER.CAP.	
	C443	QFV71HJ-124ZM	0.12MF 50V THIN FIL	
	C444	QFV71HJ-124ZM	0.12MF 50V THIN FIL	
	C445	QFV81HJ-224	0.22MF 50V THIN FIL	
	C446	QFV81HJ-224	0.22MF 50V THIN FIL	
	C447	QFV81HJ-154	0.15MF 50V THIN FIL	
	C448	QFV81HJ-154	0.15MF 50V THIN FIL	
	C449	QFV81HJ-564	0.56MF 50V THIN FIL	
	C450	QFV81HJ-564	0.56MF 50V THIN FIL	
	C451	QETB1HM-105	1MF 50V AL E.CA	
	C452	QETB1HM-105	1MF 50V AL E.CA	
	C453	QETB1HM-105	1MF 50V AL E.CA	
	C454	QETB1HM-105	1MF 50V AL E.CA	
	C455	QETB1CM-226	22MF 16V E.CAP.	
	C456	QETB1EM-107	100MF 25V AL E.CA	
	C457	QETB1CM-226	22MF 16V E.CAP.	
	C461	QFLB1HJ-472	4700PF 50V MYLAR CA	
	C462	QFLB1HJ-472	4700PF 50V MYLAR CA	
	C463	QFLB1HJ-821	820PF 50V MYLAR CA	
	C464	QFLB1HJ-821	820PF 50V MYLAR CA	
	C465	QETB1HM-105	1MF 50V AL E.CA	
	C466	QETB1HM-105	1MF 50V AL E.CA	
	C471	QETB1HM-225	2.2MF 50V AL E.CA	
	C472	QETB1CM-476	47MF 16V AL E.CA	
	C473	QCSB1HJ-470	47PF 50V CER.CAP.	
	C474	QCSB1HJ-100Y	10PF 50V CER.CAP.	
	C475	QETB1HM-225	2.2MF 50V AL E.CA	
	C476	QETB1CM-476	47MF 16V AL E.CA	
	C477	QFV81HJ-104	0.1MF 50V THIN FIL	
	C478	QFV71HJ-474ZM	0.47MF 50V THIN FIL	
	C480	QFLB1HJ-223	0.022MF 50V MYLAR CA	
	C481	QFLB1HJ-152	1500PF 50V MYLAR CA	
	C482	QETB1HM-474	0.47MF 50V E.CAP.	
	C483	QETB1HM-474	0.47MF 50V E.CAP.	
	C484	QETB1HM-474	0.47MF 50V E.CAP.	
	C487	QETB1CM-476	47MF 16V AL E.CA	
	C494	QCSB1HJ-470	47PF 50V CER.CAP.	
	C561	QETB1HM-106	10MF 50V E.CAP.	
	C562	QCVB1CM-103Y	0.01MF 16V CER.CAP.	
	C563	QETB1EM-106	10MF 25V AL E.CA	
	C564	QETB1AM-476	47MF 10V E.CAP.	
	C565	QCVB1CM-103Y	0.01MF 16V CER.CAP.	
	C566	QETB1EM-106	10MF 25V AL E.CA	
	C567	QETB1CM-226	22MF 16V E.CAP.	
	C568	QCF21HP-103A	0.01MF 50V CER.CAP.	
	C569	QETB1EM-106	10MF 25V AL E.CA	
	C570	QETB1CM-476	47MF 16V AL E.CA	
	C571	QFLB1HJ-103	0.01MF 50V MYLAR CA	
	C572	QETB1EM-106	10MF 25V AL E.CA	
	C573	QETB1CM-476	47MF 16V AL E.CA	
	C574	QFLB1HJ-103	0.01MF 50V MYLAR CA	
	C575	QETB1EM-106	10MF 25V AL E.CA	
	C581	QCVB1CM-103Y	0.01MF 16V CER.CAP.	
	C582	QETB1JM-107	100MF 63V AL E.CA	
	C583	QETB1JM-476	47MF 63V AL E.CA	
	C584	QETB1HM-226E	22MF 50V E.CAP.	
	C585	QETB1HM-226E	22MF 50V E.CAP.	
	C586	QETB1HM-476	47MF 50V E.CAP.	
	C589	QETB1HM-105	1MF 50V AL E.CA	

⚠	Item	Parts Number	Description	Area
	C590	QETB1HM-105	1MF 50V AL E.CA	
	C600	QCZ0205-155	1.5MF 25V C.CAP.	
	C601	QCS31HJ-561Z	560PF 50V CER.CAP.	
	C602	QCZ0205-155	1.5MF 25V C.CAP.	
	C603	QCZ0205-155	1.5MF 25V C.CAP.	
	C0001	QETB0JM-227	220MF 6.3V E.CAP.	
		RESISTORS		
	R023	QRD161J-103	10K 1/6W CARBON R	
	R025	QRD161J-103	10K 1/6W CARBON R	
	R027	QRD161J-103	10K 1/6W CARBON R	
	R033	QRD161J-103	10K 1/6W CARBON R	
	R034	QRD161J-103	10K 1/6W CARBON R	
	R035	QRD161J-103	10K 1/6W CARBON R	
	R036	QRD161J-103	10K 1/6W CARBON R	
	R037	QRD161J-103	10K 1/6W CARBON R	
	R038	QRD161J-103	10K 1/6W CARBON R	
	R068	QRD161J-222	2.2K 1/6W CARBON R	
	R069	QRD161J-222	2.2K 1/6W CARBON R	
	R070	QRD161J-222	2.2K 1/6W CARBON R	
	R071	QRD161J-100	10 1/6W CARBON R	
	R072	QRD161J-100	10 1/6W CARBON R	
	R075	QRD161J-100	10 1/6W CARBON R	
	R088	QRD161J-222	2.2K 1/6W CARBON R	
	R091	QRD161J-102	1K 1/6W CARBON R	
	R092	QRD161J-102	1K 1/6W CARBON R	
	R102	QRD167J-332	3.3K 1/6W CARBON R	
	R103	QRD161J-221	220 1/6W CARBON R	
	R104	QRD167J-272	2.7K 1/6W CARBON R	
	R105	QRD161J-391	390 1/6W CARBON R	
	R106	QRD161J-102	1K 1/6W CARBON R	
	R107	QRD161J-681	680 1/6W CARBON R	
	R108	QRD167J-332	3.3K 1/6W CARBON R	
	R109	QRD161J-221	220 1/6W CARBON R	
	R111	QRD161J-103	10K 1/6W CARBON R	
	R112	QRD161J-103	10K 1/6W CARBON R	
	R115	QRD161J-104	100K 1/6W CARBON R	
	R119	QRD161J-222	2.2K 1/6W CARBON R	
	R121	QRD161J-473	47K 1/6W CARBON R	
	R122	QRD161J-472	4.7K 1/6W CARBON R	
	R124	QRD161J-222	2.2K 1/6W CARBON R	
	R125	QRD161J-103	10K 1/6W CARBON R	
	R127	QRD167J-822	8.2K 1/6W CARBON R	
	R128	QRD161J-472	4.7K 1/6W CARBON R	
	R129	QRD161J-222	2.2K 1/6W CARBON R	
⚠	R130	QRZ0077-680	68 1/4W FUSIBLE	
	R132	QRD161J-102	1K 1/6W CARBON R	
	R133	QRD161J-473	47K 1/6W CARBON R	
	R134	QRD161J-102	1K 1/6W CARBON R	
	R141	QRD161J-392	3.9K 1/6W CARBON R	
	R142	QRD161J-103	10K 1/6W CARBON R	
	R143	QRD161J-103	10K 1/6W CARBON R	
	R144	QRD167J-332	3.3K 1/6W CARBON R	
	R145	QRD161J-103	10K 1/6W CARBON R	
	R146	QRD167J-272	2.7K 1/6W CARBON R	
	R147	QRD161J-473	47K 1/6W CARBON R	
	R148	QRD161J-561	560 1/6W CARBON R	
	R151	QRD167J-223	22K 1/6W CARBON R	
	R152	QRD167J-223	22K 1/6W CARBON R	
	R161	QRD161J-102	1K 1/6W CARBON R	
	R162	QRD161J-102	1K 1/6W CARBON R	
	R163	QRD161J-472	4.7K 1/6W CARBON R	
	R164	QRD161J-472	4.7K 1/6W CARBON R	
	R171	QRD161J-470	47 1/6W CARBON R	
	R172	QRD161J-103	10K 1/6W CARBON R	
	R182	QRD161J-103	10K 1/6W CARBON R	
	R183	QRD161J-103	10K 1/6W CARBON R	
	R184	QRD161J-472	4.7K 1/6W CARBON R	

■ Electrical Parts List (ENC-127)

⚠	Item	Parts Number	Description	Area
	R191	QRD161J-222	2.2K 1/6W CARBON R	
	R192	QRD161J-222	2.2K 1/6W CARBON R	
	R193	QRD161J-102	1K 1/6W CARBON R	
	R194	QRD161J-102	1K 1/6W CARBON R	
	R195	QRD161J-473	47K 1/6W CARBON R	
	R196	QRD161J-473	47K 1/6W CARBON R	
	R197	QRD161J-473	47K 1/6W CARBON R	
	R198	QRD161J-473	47K 1/6W CARBON R	
	R271	QRD161J-104	100K 1/6W CARBON R	
	R272	QRD161J-104	100K 1/6W CARBON R	
	R280	QRD161J-221	220 1/6W CARBON R	
	R281	QRD161J-224	220K 1/6W CARBON R	
	R282	QRD161J-224	220K 1/6W CARBON R	
	R283	QRD161J-100	10 1/6W CARBON R	
	R284	QRD161J-100	10 1/6W CARBON R	
	R285	QRD161J-393	39K 1/6W CARBON R	
	R286	QRD161J-393	39K 1/6W CARBON R	
	R287	QRD14CJ-6R8SX	6.8 1/4W UNF.CARB	
⚠	R288	QRD14CJ-100SX	10 1/4W UNF.CARB	
	R290	QRD167J-332	3.3K 1/6W CARBON R	
	R292	QRD161J-221	220 1/6W CARBON R	
	R293	QRD167J-511	510 1/6W CARBON R	
	R294	QRD161J-561	560 1/6W CARBON R	
	R296	QRD161J-104	100K 1/6W CARBON R	
	R297	QRD161J-222	2.2K 1/6W CARBON R	
	R301	QRD161J-103	10K 1/6W CARBON R	
	R302	QRD161J-103	10K 1/6W CARBON R	
	R303	QRD167J-153	15K 1/6W CARBON R	
	R304	QRD167J-153	15K 1/6W CARBON R	
	R315	QRD161J-103	10K 1/6W CARBON R	
	R316	QRD161J-103	10K 1/6W CARBON R	
	R317	QRD161J-103	10K 1/6W CARBON R	
	R318	QRD161J-103	10K 1/6W CARBON R	
	R319	QRD161J-103	10K 1/6W CARBON R	
	R320	QRD161J-103	10K 1/6W CARBON R	
	R321	QRD161J-103	10K 1/6W CARBON R	
	R322	QRD161J-103	10K 1/6W CARBON R	
	R323	QRD167J-562	5.6K 1/6W CARBON R	
	R324	QRD167J-562	5.6K 1/6W CARBON R	
	R325	QRD167J-562	5.6K 1/6W CARBON R	
	R326	QRD167J-562	5.6K 1/6W CARBON R	
	R331	QRD167J-682	6.8K 1/6W CARBON R	
	R332	QRD167J-682	6.8K 1/6W CARBON R	
	R333	QRD167J-151	150 1/6W CARBON R	
	R334	QRD167J-151	150 1/6W CARBON R	
	R347	QRD161J-221	220 1/6W CARBON R	
	R348	QRD161J-221	220 1/6W CARBON R	
	R349	QRD161J-821	820 1/6W CARBON R	
	R350	QRD161J-821	820 1/6W CARBON R	
	R351	QRD167J-272	2.7K 1/6W CARBON R	
	R352	QRD167J-272	2.7K 1/6W CARBON R	
	R353	QRD161J-103	10K 1/6W CARBON R	
	R354	QRD161J-103	10K 1/6W CARBON R	
	R355	QRD161J-243	24K 1/6W CARBON R	
	R356	QRD161J-243	24K 1/6W CARBON R	
	R357	QRD161J-683	68K 1/6W CARBON R	
	R358	QRD161J-683	68K 1/6W CARBON R	
	R359	QRD167J-223	22K 1/6W CARBON R	
	R360	QRD167J-223	22K 1/6W CARBON R	
	R361	QRD161J-393	39K 1/6W CARBON R	
	R362	QRD161J-393	39K 1/6W CARBON R	
	R363	QRD161J-221	220 1/6W CARBON R	
	R364	QRD161J-221	220 1/6W CARBON R	
	R367	QRD161J-274	270K 1/6W CARBON R	
	R368	QRD161J-274	270K 1/6W CARBON R	
	R369	QRD161J-470	47 1/6W CARBON R	
	R370	QRD161J-470	47 1/6W CARBON R	

⚠	Item	Parts Number	Description	Area
	R371	QRD161J-203	20K 1/6W CARBON R	
	R372	QRD161J-203	20K 1/6W CARBON R	
	R375	QRD161J-103	10K 1/6W CARBON R	
	R376	QRD161J-103	10K 1/6W CARBON R	
	R377	QRD161J-221	220 1/6W CARBON R	
	R378	QRD161J-221	220 1/6W CARBON R	
	R379	QRD161J-912	9.1K 1/6W CARBON R	
	R380	QRD161J-912	9.1K 1/6W CARBON R	
	R381	QRD161J-221	220 1/6W CARBON R	
	R382	QRD161J-221	220 1/6W CARBON R	
	R385	QRD161J-274	270K 1/6W CARBON R	
	R386	QRD161J-274	270K 1/6W CARBON R	
	R387	QRD161J-470	47 1/6W CARBON R	
	R388	QRD161J-470	47 1/6W CARBON R	
	R391	QRD161J-203	20K 1/6W CARBON R	
	R392	QRD161J-203	20K 1/6W CARBON R	
	R401	QRD167J-562	5.6K 1/6W CARBON R	
	R402	QRD167J-562	5.6K 1/6W CARBON R	
	R403	QRD161J-184	180K 1/6W CARBON R	
	R404	QRD161J-184	180K 1/6W CARBON R	
	R405	QRD161J-333	33K 1/6W CARBON R	
	R406	QRD161J-333	33K 1/6W CARBON R	
	R407	QRD161J-183	18K 1/6W CARBON R	
	R408	QRD161J-183	18K 1/6W CARBON R	
	R409	QRD161J-221	220 1/6W CARBON R	
	R410	QRD161J-221	220 1/6W CARBON R	
	R411	QRD161J-104	100K 1/6W CARBON R	
	R412	QRD161J-104	100K 1/6W CARBON R	
	R413	QRD161J-104	100K 1/6W CARBON R	
	R414	QRD161J-104	100K 1/6W CARBON R	
	R415	QRD161J-104	100K 1/6W CARBON R	
	R416	QRD161J-104	100K 1/6W CARBON R	
	R417	QRD167J-332	3.3K 1/6W CARBON R	
	R418	QRD167J-332	3.3K 1/6W CARBON R	
	R419	QRD161J-242	2.4K 1/6W CARBON R	
	R420	QRD161J-242	2.4K 1/6W CARBON R	
	R421	QRD161J-103	10K 1/6W CARBON R	
	R422	QRD161J-103	10K 1/6W CARBON R	
	R425	QRD161J-224	220K 1/6W CARBON R	
	R426	QRD161J-224	220K 1/6W CARBON R	
⚠	R429	QRD14CJ-680SX	68 1/4W UNF.CARB	
⚠	R430	QRD14CJ-680SX	68 1/4W UNF.CARB	
	R441	QRD161J-222	2.2K 1/6W CARBON R	
	R442	QRD161J-222	2.2K 1/6W CARBON R	
	R443	QRD161J-222	2.2K 1/6W CARBON R	
	R444	QRD161J-222	2.2K 1/6W CARBON R	
	R447	QRD161J-221	220 1/6W CARBON R	
	R449	QRD161J-103	10K 1/6W CARBON R	
	R450	QRD161J-103	10K 1/6W CARBON R	
	R451	QRD161J-103	10K 1/6W CARBON R	
	R452	QRD161J-103	10K 1/6W CARBON R	
	R453	QRD161J-221	220 1/6W CARBON R	
	R454	QRD161J-221	220 1/6W CARBON R	
	R455	QRD161J-123	12K 1/6W CARBON R	
	R456	QRD161J-123	12K 1/6W CARBON R	
	R457	QRD161J-133Y	13K 1/6W CARBON R	
	R458	QRD161J-133Y	13K 1/6W CARBON R	
	R459	QRD161J-102	1K 1/6W CARBON R	
	R461	QRD161J-222	2.2K 1/6W CARBON R	
	R462	QRD161J-222	2.2K 1/6W CARBON R	
	R463	QRD161J-222	2.2K 1/6W CARBON R	
	R464	QRD161J-222	2.2K 1/6W CARBON R	
	R465	QRD161J-222	2.2K 1/6W CARBON R	
	R466	QRD161J-222	2.2K 1/6W CARBON R	
	R467	QRD161J-222	2.2K 1/6W CARBON R	
	R468	QRD161J-222	2.2K 1/6W CARBON R	
	R471	QRD161J-104	100K 1/6W CARBON R	

■ Electrical Parts List (ENC-127)

⚠	Item	Parts Number	Description	Area
	R472	QRD161J-104	100K 1/6W CARBON R	
	R473	QRD161J-472	4.7K 1/6W CARBON R	
	R474	QRD161J-474	470K 1/6W CARBON R	
⚠	R475	QRD14CJ-680SX	68 1/4W UNF.CARB	
⚠	R476	QRD14CJ-680SX	68 1/4W UNF.CARB	
	R477	QRD167J-152	1.5K 1/6W CARBON R	
	R478	QRD167J-272	2.7K 1/6W CARBON R	
	R479	QRD161J-102	1K 1/6W CARBON R	
	R480	QRD167J-822	8.2K 1/6W CARBON R	
	R481	QRD167J-153	15K 1/6W CARBON R	
	R482	QRD167J-154	150K 1/6W CARBON R	
	R483	QRD167J-154	150K 1/6W CARBON R	
	R484	QRD167J-154	150K 1/6W CARBON R	
⚠	R485	QRD14CJ-220S	22 1/4W UNF.CARB	
	R486	QRD167J-223	22K 1/6W CARBON R	
	R487	QRD167J-223	22K 1/6W CARBON R	
	R488	QRD161J-103	10K 1/6W CARBON R	
	R489	QRD167J-223	22K 1/6W CARBON R	
	R490	QRD167J-152	1.5K 1/6W CARBON R	
	R491	QRD161J-103	10K 1/6W CARBON R	
	R492	QRD167J-332	3.3K 1/6W CARBON R	
	R493	QRD167J-682	6.8K 1/6W CARBON R	
	R494	QRD161J-273	27K 1/6W CARBON R	
	R495	QRD161J-392	3.9K 1/6W CARBON R	
	R498	QRD161J-221	220 1/6W CARBON R	
	R499	QRD161J-221	220 1/6W CARBON R	
	R561	QRD161J-472	4.7K 1/6W CARBON R	
	R562	QRD161J-103	10K 1/6W CARBON R	
	R563	QRD167J-152	1.5K 1/6W CARBON R	
	R564	QRD161J-472	4.7K 1/6W CARBON R	
	R567	QRD161J-392	3.9K 1/6W CARBON R	
	R570	QRD167J-332	3.3K 1/6W CARBON R	
	R571	QRD161J-472	4.7K 1/6W CARBON R	
	R572	QRD161J-242	2.4K 1/6W CARBON R	
	R573	QRD167J-153	15K 1/6W CARBON R	
	R574	QRD161J-242	2.4K 1/6W CARBON R	
	R581	QRD167J-562	5.6K 1/6W CARBON R	
⚠	R582	QRZ0077-4R7	4.7 1/4W FUSE RES	
	R583	QRD161J-104	100K 1/6W CARBON R	
⚠	R587	QRD14CJ-1R0SX	1 1/4W UNF.CARB	
⚠	R588	QRD14CJ-2R2SX	2.2 1/4W UNF.CARB	
	R589	QRD161J-473	47K 1/6W CARBON R	
	R590	QRD161J-473	47K 1/6W CARBON R	
	R591	QRD161J-472	4.7K 1/6W CARBON R	
	R592	QRD161J-472	4.7K 1/6W CARBON R	
	R600	QRG01DJ-223X	22K 1W OXIDE ME	
	R0001	QRD167J-2R7	2.7 1/6W CARBON R	
	VR301	QVPA603-501A	500 TRIMMER	
	VR302	QVPA603-501A	500 TRIMMER	
	VR303	QVPA603-501A	500 TRIMMER	
	VR304	QVPA603-501A	500 TRIMMER	
	VR305	QVPA603-104A	100K TRIMMER	
	VR306	QVPA603-104A	100K TRIMMER	
	VR307	QVPA603-104A	100K TRIMMER	
	VR308	QVPA603-104A	100K TRIMMER	
	VR309	QVPA603-104A	100K TRIMMER	
	VR310	QVPA603-104A	100K TRIMMER	
	VR311	QVPA603-503A	50K VARIABLE	
	VR312	QVPA603-503A	50K VARIABLE	
		OTHERS		
		EMW10554-005	CIR BOARD	
		E409238-001SM	SHIELD PLATE	
		QWE350-08RR	VINYL WIRE	
		QWE351-08RR	VINYL WIRE	
		QWE357-12RR	VINYL WIRE	
	J401	EMN00TV-615AJ2	PIN JACK	
	K022	ENZ8101-007	INDUCTOR	

⚠	Item	Parts Number	Description	Area
	K023	ENZ8101-007	INDUCTOR	
	K024	ENZ8101-007	INDUCTOR	
	L301	ENZ6002-012	OSCILLATOR COIL	
	L303	EQL2106-562	INDUCTOR	
	L304	EQL2106-562	INDUCTOR	
	L305	EQL2106-223	INDUCTOR	
	L306	EQL2106-223	INDUCTOR	
	L405	EQL4007-220	INDUCTOR	
	T111	EQR7121-004	RF COIL	
	T141	EQT2140-021	I.F.TRANSFORMER	
	T142	ECB1560-010	CERAMIC FILTER	
	X081	VCX5062-001Z	CRYSTAL	
	AT101	EMB40YV-401KJ4	ANTENNA TERMINAL	
	CF101	ECB2123-006R	CERAMIC FILTER	
	CF102	ECB2123-006R	CERAMIC FILTER	
	CN301	VMC0314-P08	CONNECT TERMINAL	
	CN302	VMC0314-P08	CONNECT TERMINAL	
	CN331	EMV7155-106R	CONNECT TERMINAL	
	CN332	EMV7155-106R	CONNECT TERMINAL	
	CN401	VMC0163-040	CONNECT TERMINAL	
	CN402	VMC0075-003	CONNECTOR	
	CN502	EMV7125-011R	MALE CONNECTOR	
	CN513	EMV5167-116	CONNECT TERMINAL	
	CN514	EMV5167-128	CONNECT TERMINAL	
	CN713	EMV7145-003Z	SOCKET ASSY	
	EP101	E409182-001SM	EARTH TERMINAL	
	EP102	E409182-001SM	EARTH TERMINAL	
	FE101	EAF2203-004	FRONT END	
	LC091	EQF0601-222	CERAMIC FILTER	
	LP141	EQF0101-013	LOWPASS FILTER	
	LP142	EQF0101-013	LOWPASS FILTER	
	SP081	VYH7653-003	I.C.PROTECTOR	
	SP102	VYH7653-002	I.C.SOCKET	
	SP103	VYH7653-002	I.C.SOCKET	
	SP121	VYH7653-002	I.C.SOCKET	
	XT121	ECX0007-200KWJ1	CRYSTAL	
	XT141	ECXPR46-001A	CRYSTAL	
	XT161	ECXP3R6-001ZA	CRYSTAL	

■ Electrical Parts List (ENB-219)

⚠	Item	Parts Number	Description	Area
		I.C.S		
	IC601	AN8806SB	I.C(MONO-ANALOG)	
	IC602	BA6398FP	I.C(MONO-ANALOG)	
	IC603	MN35510-S	I.C(M)	
	IC701	MN172412K8R	I.C(MICRO-COMPUTER)	
	IC702	NJU3719L	I.C(MONO-ANALOG)	
	IC703	SPS-420-1	INFRARED DETECT UNIT	
	IC751	BA15218N	I.C(MONO-ANALOG)	
	IC752	BA15218N	I.C(MONO-ANALOG)	
		DIODES		
	D701	1SS133	SI.DIODE	
	D702	1SS133	SI.DIODE	
	D703	1SS133	SI.DIODE	
	D704	1SS133	SI.DIODE	
	D705	1SS133	SI.DIODE	
	D707	1SS133	SI.DIODE	
	D709	1SS133	SI.DIODE	
	D711	1SS133	SI.DIODE	
	D715	SPR-39MVWF	L.E.D.	
	D716	SPR-39MVWF	L.E.D.	
	D717	SPR-39MVWF	L.E.D.	
	D718	1SR35-100	SI.DIODE	
	D718	1SS133	SI.DIODE	
	D719	1SS133	SI.DIODE	
	D720	1SS133	SI.DIODE	
	D721	1SS133	SI.DIODE	
	D722	1SS133	SI.DIODE	
	D723	1SS133	SI.DIODE	
	D724	1SS133	SI.DIODE	
	D725	1SS133	SI.DIODE	
	D726	SPR-39MVWF	L.E.D.	
	D727	SPR-39MVWF	L.E.D.	
	D728	SPR-39MVWF	L.E.D.	
	D729	SPR-39MVWF	L.E.D.	
	D730	SPR-39MVWF	L.E.D.	
	D731	SPR-39MVWF	L.E.D.	
	D732	SPR-39MVWF	L.E.D.	
	D733	SPR-39MVWF	L.E.D.	
	D734	SLR-342VC3F	L.E.D.	
	D735	SLR-342MCA47	L.E.D.	
	D736	SLR-342MCA47	L.E.D.	
	D737	SLR-342MCA47	L.E.D.	
	D738	SLR-342MCA47	L.E.D.	
	D739	SLR-342MCA47	L.E.D.	
	D740	SLR-342MCA47	L.E.D.	
	D741	SLR-342MCA47	L.E.D.	
	D742	SLR-342VC3F	L.E.D.	
	D743	SLR-342VC3F	L.E.D.	
	D744	SIR-56SB3F	L.E.D.	
	D745	SLR-342MCA47	L.E.D.	
	D746	SLR-342MCA47	L.E.D.	
	D791	SLR-9118A-T1	L.E.D.	
		TRANSISTORS		
	Q601	2SA952(L,K)	SI.TRANSISTOR	
	Q631	2SA952(L,K)	SI.TRANSISTOR	
	Q701	DTA144ES	DIGITAL TRANSISTOR	
	Q702	DTA144ES	DIGITAL TRANSISTOR	
	Q703	DTA144ES	DIGITAL TRANSISTOR	
	Q704	DTC114ES	DIGITAL TRANSISTOR	
	Q705	DTC114ES	DIGITAL TRANSISTOR	
	Q706	DTA114TS	DIGITAL TRANSISTOR	
	Q707	DTA114TS	DIGITAL TRANSISTOR	
	Q708	DTA144ES	DIGITAL TRANSISTOR	
	Q709	DTA144ES	DIGITAL TRANSISTOR	
	Q710	DTA144ES	DIGITAL TRANSISTOR	
	Q711	DTA144ES	DIGITAL TRANSISTOR	
	Q712	DTA144ES	DIGITAL TRANSISTOR	
	Q713	DTA144ES	DIGITAL TRANSISTOR	
	Q714	DTA123ES	DIODE	

⚠	Item	Parts Number	Description	Area
	Q715	DTA123ES	DIODE	
	Q716	DTC114ES	DIGITAL TRANSISTOR	
	Q791	SPS-1118C-T1	PHOTO TRANSISTOR	
		CAPACITORS		
	C602	QCZ0205-155	1.5MF 25V C.CAP.	
	C604	QETB1AM-107	100MF 10V AL E.CAP.	
	C605	QETB1EM-106	10MF 25V AL E.CAP.	
	C606	QCBB1HK-102Y	1000PF 50V CER.CAP.	
	C607	QCBB1HK-102Y	1000PF 50V CER.CAP.	
	C608	QETB1HM-105	1MF 50V AL E.CAP.	
	C609	QCBB1HK-101Y	100PF 50V CER.CAP.	
	C610	QFLB1HJ-273	0.027MF 50V MYLAR CAP.	
	C611	QCXB1CM-472Y	4700PF 16V CER.CAP.	
	C612	QCVB1CM-103Y	0.01MF 16V CER.CAP.	
	C613	QCBB1HK-331Y	330PF 50V CER.CAP.	
	C614	QFLB1HJ-104	0.1MF 50V MYLAR CAP.	
	C615	QCHB1EZ-223	0.022MF 25V CER.CAP.	
	C616	QCHB1EZ-223	0.022MF 25V CER.CAP.	
	C617	QCHB1EZ-223	0.022MF 25V CER.CAP.	
	C618	QCXB1CM-222Y	2200PF 16V CER.CAP.	
	C619	QCBB1HK-271Y	270PF 50V CER.CAP.	
	C620	QCSB1HJ-470	47PF 50V CER.CAP.	
	C621	QCBB1HK-821Y	820PF 50V CER.CAP.	
	C622	QETB1AM-476	47MF 10V E.CAP.	
	C623	QFLB1HJ-273	0.027MF 50V MYLAR CAP.	
	C625	QCZ0205-155	1.5MF 25V C.CAP.	
	C631	QETB1AM-477	470MF 10V E.CAP.	
	C632	QETB1AM-107	100MF 10V AL E.CAP.	
	C651	QCSB1HJ-120Y	12PF 50V CER.CAP.	
	C652	QCSB1HJ-120Y	12PF 50V CER.CAP.	
	C653	QCHB1EZ-223	0.022MF 25V CER.CAP.	
	C654	QCSB1HJ-5R6YM	5.6PF 50V CER.CAP.	
	C655	QCC21EM-473	0.047MF 25V CER.CAP.	
	C661	QCBB1HK-471Y	470PF 50V CER.CAP.	
	C662	QCC21EM-473	0.047MF 25V CER.CAP.	
	C663	QFLB1HJ-223	0.022MF 50V MYLAR CAP.	
	C664	QCHB1EZ-223	0.022MF 25V CER.CAP.	
	C665	QFV81HJ-334	0.33MF 50V TF.CAP.	
	C671	QCXB1CM-222Y	2200PF 16V CER.CAP.	
	C672	QCXB1CM-222Y	2200PF 16V CER.CAP.	
	C673	QEK61AM-227ZM	220MF 10V AL E.CAP.	
	C674	QCHB1EZ-223	0.022MF 25V CER.CAP.	
	C676	QCBB1HK-102Y	1000PF 50V CER.CAP.	
	C681	QCXB1CM-222Y	2200PF 16V CER.CAP.	
	C682	QCSB1HJ-470	47PF 50V CER.CAP.	
	C699	QCC21EM-473	0.047MF 25V CER.CAP.	
	C701	QCVB1CM-103Y	0.01MF 16V CER.CAP.	
	C702	QCT26CH-330	33PF 50V CER.CAP.	
	C703	QCVB1CM-103Y	0.01MF 16V CER.CAP.	
	C704	QER50JM-107	100MF 6.3V AL E.CAP.	
	C706	QCHB1EZ-223	0.022MF 25V CER.CAP.	
	C707	QER61HM-226	22MF 50V AL E.CAP.	
	C711	QCHB1EZ-223	0.022MF 25V CER.CAP.	
	C712	QER50JM-107	100MF 6.3V AL E.CAP.	
	C715	QETB0JM-108N	1000MF 6.3V E.CAP.	
	C716	QEZ0227-10AZ	E.CAP.	
	C718	QCBB1HK-102Y	1000PF 50V CER.CAP.	
	C719	QCVB1CM-103Y	0.01MF 16V CER.CAP.	
	C736	QCBB1HK-221Y	220PF 50V CER.CAP.	
	C737	QCBB1HK-221Y	220PF 50V CER.CAP.	
	C738	QCBB1HK-221Y	220PF 50V CER.CAP.	
	C739	QCBB1HK-221Y	220PF 50V CER.CAP.	
	C751	QETB1EM-106	10MF 25V AL E.CAP.	
	C752	QCBB1HK-102Y	1000PF 50V CER.CAP.	
	C753	QCBB1HK-101Y	100PF 50V CER.CAP.	
	C754	QCBB1HK-101Y	100PF 50V CER.CAP.	
	C755	QETB1EM-106	10MF 25V AL E.CAP.	
	C756	QCBB1HK-102Y	1000PF 50V CER.CAP.	
	C757	QETB1EM-106	10MF 25V AL E.CAP.	

■ Electrical Parts List (ENB-219)

⚠	Item	Parts Number	Description	Area
	C758	QCBB1HK-101Y	100PF 50V CER. CAP.	
	C761	QCBB1HK-102Y	1000PF 50V CER. CAP.	
	C762	QETB1EM-106	10MF 25V AL E. CAP.	
	C763	QCBB1HK-101Y	100PF 50V CER. CAP.	
	C764	QETB1EM-106	10MF 25V AL E. CAP.	
	C765	QETB1EM-106	10MF 25V AL E. CAP.	
	C767	QCGB1HK-102	1000PF 50V CER. CAP.	
	C768	QCBB1HK-101Y	100PF 50V CER. CAP.	
	C769	QCBB1HK-181Y	180PF 50V CER. CAP.	
	C770	QETB1EM-476	47MF 25V AL E. CAP.	
	C773	QETB1EM-106	10MF 25V AL E. CAP.	
	C774	QETB1EM-106	10MF 25V AL E. CAP.	
	C775	QCFB1HZ-104Y	0.1MF 50V CER. CAP.	
	C776	QCHB1EZ-223	0.022MF 25V CER. CAP.	
	C777	QCBB1HK-681Y	680PF 50V CER. CAP.	
	C778	QCFB1HZ-104Y	0.1MF 50V CER. CAP.	
	C781	QCBB1HK-101Y	100PF 50V CER. CAP.	
	C785	QCBB1HK-561Y	560PF 50V CER. CAP.	
	C786	QFV81HJ-224	0.22MF 50V THIN FILM CA	
	C787	QCZ0205-155	1.5MF 25V C. CAP.	
	C791	QCBB1HK-561Y	560PF 50V CER. CAP.	
	C793	QFV81HJ-104	0.1MF 50V THIN FILM CA	
	TC701	ENZ1003-015	0.1MF TRIMMER CAPA	
		RESISTORS		
	R601	QRD161J-622	6.2K 1/6W CARBON RES.	
	R602	QRD167J-562	5.6K 1/6W CARBON RES.	
	R603	QRD161J-125	1.2M 1/6W CARBON RES.	
	R605	QRD167J-134	130K 1/6W CARBON RES.	
	R606	QRD161J-913	91K 1/6W CARBON RES.	
	R607	QRD161J-273	27K 1/6W CARBON RES.	
	R609	QRD161J-114	110K 1/6W CARBON RES.	
	R610	QRD167J-154	150K 1/6W CARBON RES.	
	R612	QRD161J-103	10K 1/6W CARBON RES.	
	R613	QRD167J-121	120 1/6W CARBON RES.	
	R614	QRD161J-100	10 1/6W CARBON RES.	
	R615	QRD161J-120	12 1/6W CARBON RES.	
	R616	QRD161J-910Y	91 1/6W CARBON RES.	
	R631	QRD161J-331	330 1/6W CARBON RES.	
	R632	QRD161J-101	100 1/6W CARBON RES.	
	R641	QRD161J-563	56K 1/6W CARBON RES.	
	R642	QRD161J-123	12K 1/6W CARBON RES.	
	R643	QRD167J-822	8.2K 1/6W CARBON RES.	
	R644	QRD167J-223	22K 1/6W CARBON RES.	
	R645	QRD167J-223	22K 1/6W CARBON RES.	
	R646	QRD161J-182	1.8K 1/6W CARBON RES.	
	R647	QRD167J-562	5.6K 1/6W CARBON RES.	
	R651	QRD161J-102	1K 1/6W CARBON RES.	
	R652	QRD161J-102	1K 1/6W CARBON RES.	
	R653	QRD161J-102	1K 1/6W CARBON RES.	
	R654	QRD161J-102	1K 1/6W CARBON RES.	
	R655	QRD161J-220	22 1/6W CARBON RES.	
	R661	QRD161J-104	100K 1/6W CARBON RES.	
	R663	QRD161J-124	120K 1/6W CARBON RES.	
	R664	QRD161J-681	680 1/6W CARBON RES.	
	R666	QRD161J-220	22 1/6W CARBON RES.	
	R671	QRD161J-102	1K 1/6W CARBON RES.	
	R672	QRD161J-102	1K 1/6W CARBON RES.	
	R681	QRD161J-101	100 1/6W CARBON RES.	
	R691	QRD161J-102	1K 1/6W CARBON RES.	
	R692	QRD161J-271	270 1/6W CARBON RES.	
	R693	QRD161J-101	100 1/6W CARBON RES.	
	R694	QRD161J-101	100 1/6W CARBON RES.	
	R696	QRD161J-101	100 1/6W CARBON RES.	
	R697	QRD161J-101	100 1/6W CARBON RES.	
	R698	QRD161J-102	1K 1/6W CARBON RES.	
	R699	QRD161J-102	1K 1/6W CARBON RES.	
	R701	QRD161J-221	220 1/6W CARBON RES.	
	R702	QRD161J-221	220 1/6W CARBON RES.	
	R703	QRD161J-221	220 1/6W CARBON RES.	

⚠	Item	Parts Number	Description	Area
	R704	QRD161J-221	220 1/6W CARBON RES.	
	R705	QRD161J-221	220 1/6W CARBON RES.	
	R706	QRD161J-221	220 1/6W CARBON RES.	
	R707	QRD161J-104	100K 1/6W CARBON RES.	
	R708	QRD161J-470	47 1/6W CARBON RES.	
	R709	QRD161J-103	10K 1/6W CARBON RES.	
	R710	QRD161J-103	10K 1/6W CARBON RES.	
	R713	QRD161J-103	10K 1/6W CARBON RES.	
	R714	QRD167J-111	110 1/6W CARBON RES.	
	R715	QRD161J-221	220 1/6W CARBON RES.	
	R716	QRD167J-111	110 1/6W CARBON RES.	
	R717	QRD161J-221	220 1/6W CARBON RES.	
	R718	QRD167J-111	110 1/6W CARBON RES.	
	R719	QRD161J-221	220 1/6W CARBON RES.	
	R720	QRD167J-111	110 1/6W CARBON RES.	
	R721	QRD161J-221	220 1/6W CARBON RES.	
	R722	QRD167J-151	150 1/6W CARBON RES.	
	R723	QRD167J-151	150 1/6W CARBON RES.	
	R724	QRD167J-121	120 1/6W CARBON RES.	
	R725	QRD161J-221	220 1/6W CARBON RES.	
	R726	QRD161J-221	220 1/6W CARBON RES.	
	R727	QRD161J-221	220 1/6W CARBON RES.	
	R729	QRD161J-271	270 1/6W CARBON RES.	
	R730	QRD161J-271	270 1/6W CARBON RES.	
	R731	QRD167J-121	120 1/6W CARBON RES.	
	R732	QRD161J-473	47K 1/6W CARBON RES.	
	R733	QRD161J-473	47K 1/6W CARBON RES.	
	R734	QRD161J-473	47K 1/6W CARBON RES.	
	R736	QRD161J-104	100K 1/6W CARBON RES.	
	R737	QRD161J-104	100K 1/6W CARBON RES.	
	R738	QRD161J-104	100K 1/6W CARBON RES.	
	R745	QRD161J-221	220 1/6W CARBON RES.	
	R746	QRD161J-221	220 1/6W CARBON RES.	
	R751	QRD161J-102	1K 1/6W CARBON RES.	
	R752	QRD161J-103	10K 1/6W CARBON RES.	
	R753	QRD161J-561	560 1/6W CARBON RES.	
	R754	QRD161J-473	47K 1/6W CARBON RES.	
	R755	QRD161J-101	100 1/6W CARBON RES.	
	R756	QRD161J-103	10K 1/6W CARBON RES.	
	R759	QRD161J-102	1K 1/6W CARBON RES.	
	R761	QRD161J-103	10K 1/6W CARBON RES.	
	R762	QRD161J-102	1K 1/6W CARBON RES.	
	R767	QRD161J-103	10K 1/6W CARBON RES.	
	R768	QRD161J-102	1K 1/6W CARBON RES.	
	R769	QRD161J-103	10K 1/6W CARBON RES.	
	R771	QRD161J-104	100K 1/6W CARBON RES.	
	R775	QRD161J-222	2.2K 1/6W CARBON RES.	
	R776	QRD161J-101	100 1/6W CARBON RES.	
	R777	QRD161J-473	47K 1/6W CARBON RES.	
	R778	QRD161J-561	560 1/6W CARBON RES.	
	R791	QRD161J-122	1.2K 1/6W CARBON RES.	
	R801	QRD161J-102	1K 1/6W CARBON RES.	
	R802	QRD161J-102	1K 1/6W CARBON RES.	
	R803	QRD161J-102	1K 1/6W CARBON RES.	
	R804	QRD161J-102	1K 1/6W CARBON RES.	
	R805	QRD161J-102	1K 1/6W CARBON RES.	
	R806	QRD161J-102	1K 1/6W CARBON RES.	
	R807	QRD161J-102	1K 1/6W CARBON RES.	
	R808	QRD161J-222	2.2K 1/6W CARBON RES.	
	R809	QRD161J-222	2.2K 1/6W CARBON RES.	
	R810	QRD167J-121	120 1/6W CARBON RES.	
	RA701	QRB129J-104	100K 1/10WNETWORK RES.	
	RA702	QRB129J-104	100K 1/10WNETWORK RES.	
	RA703	QRB129J-104	100K 1/10WNETWORK RES.	
	RA704	QRB129J-104	100K 1/10WNETWORK RES.	
	VR751	QVAA72B-E54B	50K VARIABLE RE	
		OTHERS		
		EMW10555-006	CIRCUIT BOARD	
	J751	QMS3R81-EE0S	HEADPHONE JACK	

■ Electrical Parts List (ENB-219)

⚠	Item	Parts Number	Description	Area
	J752	QMS3R81-EE0S	HEADPHONE JACK	
	J761	VMJ4024-001	HEADPHONE JACK	
	K001	ENZ8101-007	INDUCTOR	
	K002	ENZ8101-007	INDUCTOR	
	P699	TOTX178	OPTICAL JACK	
	S701	ESP0001-023M	TACT SWITCH	
	S702	ESP0001-023M	TACT SWITCH	
	S703	ESP0001-023M	TACT SWITCH	
	S704	ESP0001-023M	TACT SWITCH	
	S705	ESP0001-023M	TACT SWITCH	
	S706	ESP0001-023M	TACT SWITCH	
	S707	ESP0001-023M	TACT SWITCH	
	S708	ESP0001-023M	TACT SWITCH	
	S709	ESP0001-023M	TACT SWITCH	
	S710	ESP0001-023M	TACT SWITCH	
	S711	ESP0001-023M	TACT SWITCH	
	S712	ESP0001-023M	TACT SWITCH	
	S713	ESP0001-023M	TACT SWITCH	
	S714	ESP0001-023M	TACT SWITCH	
	S715	ESP0001-023M	TACT SWITCH	
	S716	ESP0001-023M	TACT SWITCH	
	S717	ESP0001-023M	TACT SWITCH	
	S718	ESP0001-023M	TACT SWITCH	
	S719	ESP0001-023M	TACT SWITCH	
	S720	ESP0001-023M	TACT SWITCH	
	S721	ESP0001-023M	TACT SWITCH	
	S722	ESP0001-023M	TACT SWITCH	
	S723	ESP0001-023M	TACT SWITCH	
	S724	ESP0001-023M	TACT SWITCH	
	S725	ESP0001-023M	TACT SWITCH	
	S726	ESP0001-023M	TACT SWITCH	
	S727	ESP0001-023M	TACT SWITCH	
	S728	ESP0001-023M	TACT SWITCH	
	S729	ESP0001-023M	TACT SWITCH	
	S730	ESP0001-023M	TACT SWITCH	
	X651	ECX0169-344EF	CRYSTAL	
	X701	ECX0006-000KNJ	CRYSTAL	
	BC112	EWS26C-A910	SOCKET WIRE ASSY	
	BC113	EWS26D-A910	SOCKET WIRE ASSY	
	BK701	E309500-001SM	FL HOLDER	
	CN411	VMC0163-R40	CONNECT TERMINAL	
	CN515	VMC0163-R15	CONNECT TERMINAL	
	CN601	EMV7144-015R	CONNECT TERMINAL	
	CN602	EMV5109-006A	CONNECT TERMINAL	
	CN603	VMC0163-R07	CONNECT TERMINAL	
	CN604	VMC0163-R11	CONNECT TERMINAL	
	CN605	EWS263-A910	SOCKET WIRE ASSY	
	CN606	EMV7144-015R	CONNECT TERMINAL	
	CN615	VMC0075-003	CONNECTOR	
	CN701	VMC0314-P06	CONNECT TERMINAL	
	CN711	VMC0314-S06	CONNECT TERMINAL	
	DI701	ELU0001-206	FLUORESCENT DISPLAY TUBE	
	FS701	E3400-439	FELT SPACER	
	FS702	E3400-439	FELT SPACER	
	FW701	VWSC10-133K3K	FLAT WIRE ASSY	
	FW702	VWSC10-133K3K	FLAT WIRE ASSY	
	FW703	VWSC10-133K3K	FLAT WIRE ASSY	
	FW704	EWR33D-20SS	FLAT WIRE ASSY	
	FW712	VWSC02-203K3K	FLAT WIRE ASSY	
	FW713	EWR33D-08LS	CORD	
	FW751	EWR39D-10LS	FLAT WIRE ASSY	
	JS701	QSJ4002-E04J5	ROTARY SWITCH	
	SP601	VYH7237-001	I.C. COVER	
	SP602	VYH7237-003	I.C. COVER	
	SP603	VYH7237-003	I.C. COVER	
	SP701	VYH7653-001	SPRING	
	TP601	QMV5004-002K	PLUG ASSY	
	TW601	EWF102-047	TERMINAL WIRE	
	TW701	EWT035-001	TERMINAL WIRE	

■ Electrical Parts List (C3 Mecha.)

⚠	Item	Parts Number	Description	Area
		I.C.S		
	IC802	TA8409S	I.C(MONO-ANALOG)	
	IC803	TA8409S	I.C(MONO-ANALOG)	
		CAPACITORS		
	C801	QEK51AM-107	100MF 10V AL E.CAP.	
	C802	QEK51EM-475	4.7MF 25V AL E.CAP.	
	C803	QFLB1HJ-102	1000PF 50V MYLAR CAP.	
	C804	QCFB1HZ-104Y	0.1MF 50V CER.CAP.	
	C805	QCVB1CM-103Y	0.01MF 16V CER.CAP.	
	C806	QEK51CM-476	47MF 16V AL E.CAP.	
	C807	QEK51CM-476	47MF 16V AL E.CAP.	
	C808	QFLB1HJ-102	1000PF 50V MYLAR CAP.	
	C810	QCZ0205-155	1.5MF 25V C.CAP.	
	C811	QCZ0205-155	1.5MF 25V C.CAP.	
	C813	QCVB1CM-103Y	0.01MF 16V CER.CAP.	
	C821	QCBB1HK-102Y	1000PF 50V CER.CAP.	
		RESISTORS		
	R805	QRD161J-102	1K 1/6W CARBON RES.	
	R806	QRD161J-471	470 1/6W CARBON RES.	
	R807	QRD161J-471	470 1/6W CARBON RES.	
	R808	QRD161J-102	1K 1/6W CARBON RES.	
	R810	QRD161J-684	680K 1/6W CARBON RES.	
	R811	QRD161J-105	1M 1/6W CARBON RES.	
	R813	QRD161J-102	1K 1/6W CARBON RES.	
	R814	QRD161J-102	1K 1/6W CARBON RES.	
	R815	QRD161J-102	1K 1/6W CARBON RES.	
	R816	QRD161J-102	1K 1/6W CARBON RES.	
	R817	QRD161J-102	1K 1/6W CARBON RES.	
	R818	QRD161J-102	1K 1/6W CARBON RES.	
	R819	QRD161J-102	1K 1/6W CARBON RES.	
	R820	QRD161J-102	1K 1/6W CARBON RES.	
	R821	QRD161J-102	1K 1/6W CARBON RES.	
	R822	QRD161J-102	1K 1/6W CARBON RES.	
	R823	QRD161J-102	1K 1/6W CARBON RES.	
	R824	QRD161J-102	1K 1/6W CARBON RES.	
	R825	QRD161J-102	1K 1/6W CARBON RES.	
	R826	QRD161J-102	1K 1/6W CARBON RES.	
	R827	QRD161J-102	1K 1/6W CARBON RES.	
	R828	QRD161J-102	1K 1/6W CARBON RES.	
	R829	QRD161J-102	1K 1/6W CARBON RES.	
	R830	QRD161J-102	1K 1/6W CARBON RES.	
	R832	QRD161J-181	180 1/6W CARBON RES.	
	R833	QRD161J-102	1K 1/6W CARBON RES.	
	R834	QRD161J-102	1K 1/6W CARBON RES.	
	R839	QRD167J-332	3.3K 1/6W CARBON RES.	
	R840	QRD167J-562	5.6K 1/6W CARBON RES.	
		OTHERS		
		UPD65612GB-208	I.C(M)	
		VMW1377-004XMM	PW BOARD	
		VYH7237-001MM	IC HOLDER	
	L801	VQP0018-100	INDUCTOR	
	L802	VQP0033-100Z	INDUCTOR	
	L803	VQP0033-100Z	INDUCTOR	
	L804	VQP0033-100Z	INDUCTOR	
	CN801	VMC0163-R10	CONNECT TERMINAL	
	CN802	VMC0289-P07	CONNECT TERMINAL	
	CN803	VMC0324-12310	CONNECT TERMINAL	

■ Electrical Parts List (ENV-002)

⚠	Item	Parts Number	Description	Area
		I.C.S		
	IC101	CL480-C4	I.C.	
	IC102	JCE0002-X	I.C.	
	IC103	HM514260CJ-7X	I.C(D-RAM)	
	IC103	UPD424260LE-70X	I.C(D-RAM)	
	IC104	BU1418K	I.C(DIGI-MOS)	
	IC105	BU2173F-X	I.C(DIGI-MOS)	
	IC106	UPD6461GS-635X	I.C.	
	IC107	PQ20VZ11X	I.C(M)	
	IC108	TC7SH04FU	I.C(DIGI-MOS)	
	IC111	MN171601JJW1	I.C(MICRO-COMPUTER)	
	IC112	TC55257DFLL85EX	I.C(S-RAM)	
	IC113	HD74HCT244FPW	I.C(DIGI-MOS)	
	IC114	HD74HCT245FPW	I.C(DIGI-MOS)	
		DIODES		
	D141	DTZ4.7(B)-X	ZENER DIODE	
		CAPACITORS		
	C101	NCF31EZ-104AY	0.1MF 25V CER.CAP.	
	C102	NCF31EZ-104AY	0.1MF 25V CER.CAP.	
	C103	NCF31EZ-104AY	0.1MF 25V CER.CAP.	
	C105	NCF31EZ-104AY	0.1MF 25V CER.CAP.	
	C106	NCF31EZ-104AY	0.1MF 25V CER.CAP.	
	C107	NCF31EZ-104AY	0.1MF 25V CER.CAP.	
	C110	NCF31EZ-104AY	0.1MF 25V CER.CAP.	
	C111	NCF31EZ-104AY	0.1MF 25V CER.CAP.	
	C112	NCF31EZ-104AY	0.1MF 25V CER.CAP.	
	C113	NCF31EZ-104AY	0.1MF 25V CER.CAP.	
	C115	NCF31EZ-104AY	0.1MF 25V CER.CAP.	
	C116	NCF31EZ-104AY	0.1MF 25V CER.CAP.	
	C122	NCS31HJ-150AY	15PF 50V CER.CAP.	
	C123	NCF31EZ-104AY	0.1MF 25V CER.CAP.	
	C124	NCF31EZ-104AY	0.1MF 25V CER.CAP.	
	C125	NCF31EZ-104AY	0.1MF 25V CER.CAP.	
	C126	NEA20JM-226NZ	22MF 6.3V AL E.CAP.	
	C127	NCF31EZ-104AY	0.1MF 25V CER.CAP.	
	C131	NCF31EZ-104AY	0.1MF 25V CER.CAP.	
	C132	NCF31EZ-104AY	0.1MF 25V CER.CAP.	
	C133	NCF31EZ-104AY	0.1MF 25V CER.CAP.	
	C134	NCF31EZ-104AY	0.1MF 25V CER.CAP.	
	C141	NCB31HK-472AY	4700PF 50V CER.CAP.	
	C151	NCF31EZ-104AY	0.1MF 25V CER.CAP.	
	C152	NEA20JM-226NZ	22MF 6.3V AL E.CAP.	
	C153	NCF31EZ-104AY	0.1MF 25V CER.CAP.	
	C154	NEA20JM-226NZ	22MF 6.3V AL E.CAP..	
	C155	NCF31EZ-104AY	0.1MF 25V CER.CAP.	
	C156	NEA20JM-226NZ	22MF 6.3V AL E.CAP.	
	C157	NEA20JM-226NZ	22MF 6.3V AL E.CAP.	

⚠	Item	Parts Number	Description	Area
	C158	NCF31EZ-104AY	0.1MF 25V CER.CAP.	
	C161	NCS31HJ-101AY	100PF 50V CER.CAP.	
	C162	NCS21HJ-681AY	680PF 50V CER.CAP.	
	C163	NCS31HJ-101AY	100PF 50V CER.CAP.	
	C167	NCS31HJ-471AY	470PF 50V CER.CAP.	
	C168	NCB31HK-152AY	1500PF 50V CER.CAP.	
	C170	NCS31HJ-471AY	470PF 50V CER.CAP.	
	C172	NCS31HJ-471AY	470PF 50V CER.CAP.	
	C181	NCF31EZ-104AY	0.1MF 25V CER.CAP.	
	TC101	ENZ1003-017T	010MF TRIMMER CAPA	
		RESISTORS		
	R102	NRSA63J-473NY	METAL GLAZE	
	R103	NRSA63J-103N	METAL GLAZE	
	R104	NRSA63J-105NY	METAL GLAZE	
	R105	NRSA63J-242NY	METAL GLAZE	
	R106	NRSA63J-682NY	METAL GLAZE	
	R107	NRSA63J-112NY	METAL GLAZE	
	R108	NRSA63J-750NY	METAL GLAZE	
	R109	NRSA63J-111NY	METAL GLAZE	
	R110	NRSA63J-151NY	METAL GLAZE	
	R111	NRSA63J-182NY	METAL GLAZE	
	R112	NRSA63J-112NY	METAL GLAZE	
	R115	NRSA63J-0R0AY	METAL GLAZE	
	R121	NRSA63J-102NY	METAL GLAZE	
	R122	NRSA63J-102NY	METAL GLAZE	
	R123	NRSA63J-102NY	METAL GLAZE	
	R124	NRSA63J-102NY	METAL GLAZE	
	R125	NRSA63J-102NY	METAL GLAZE	
	R132	NRSA63J-0R0AY	METAL GLAZE	
	R135	NRSA63J-330NY	METAL GLAZE	
	R141	NRSA63J-750NY	METAL GLAZE	
	R142	NRSA63J-562NY	METAL GLAZE	
	R143	NRSA63J-0R0AY	METAL GLAZE	
	R144	NRSA63J-0R0AY	METAL GLAZE	
	R145	NRSA63J-0R0AY	METAL GLAZE	
	R146	NRSA63J-0R0AY	METAL GLAZE	
		OTHERS		
		EMW10553-002A	PRINTED BOARD	
	K101	ENZ8102-N102AY	FERRITE BEADS	
	K103	ENZ8102-N102AY	FERRITE BEADS	
	L101	VQP1007-2R7Y	INDUCTOR	
	L102	VQP1007-2R7Y	INDUCTOR	
	L103	VQP1007-2R7Y	INDUCTOR	
	X101	ECXA014-N01WJ3	CRYSTAL	
	CN101	EMV7154-215E	CONNECT TERMINAL	
	CN102	EMV5109-012BE	CONNECT TERMINAL	
	CN103	EMV5109-013BE	CONNECT TERMINAL	

Accessories List

Block No. M5MM

⚠	Item	Parts Number	Parts Name	Q'ty	Description	Area
	1	E30580-2480B	INSTRUCTION BOOK	1		
	2	E309758-002	POLY BAG	1		
	3	EQB4001-015	LOOP ANTENNA	1		
	4	RM-SEV805TU	WIRE-LESS REMOTE CONTROL	1		
	5	UM-3(DJ)-2PSA	DRY CELL	1		
	6	EWP304-014	SIGNAL CORD	1		
	7	ENZ2203-001	ADAPTOR PLUG	1		U UT
⚠	8	ENZ2202-001	SIEMENS PLUG	1		US
	9	EWP201-011	ANTENNA WIRE	1		

Packing Materials and Part Numbers

Block No. M6MM

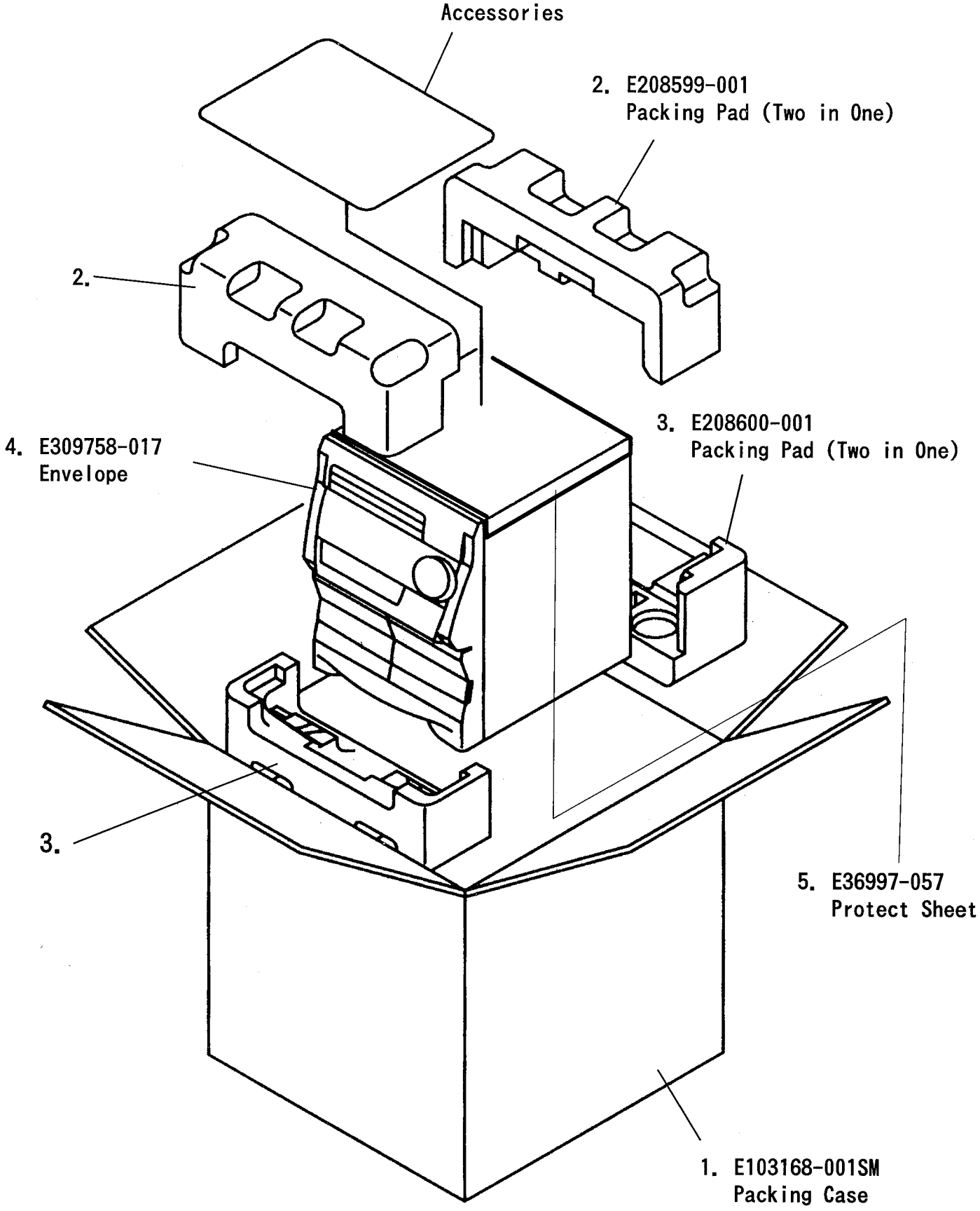

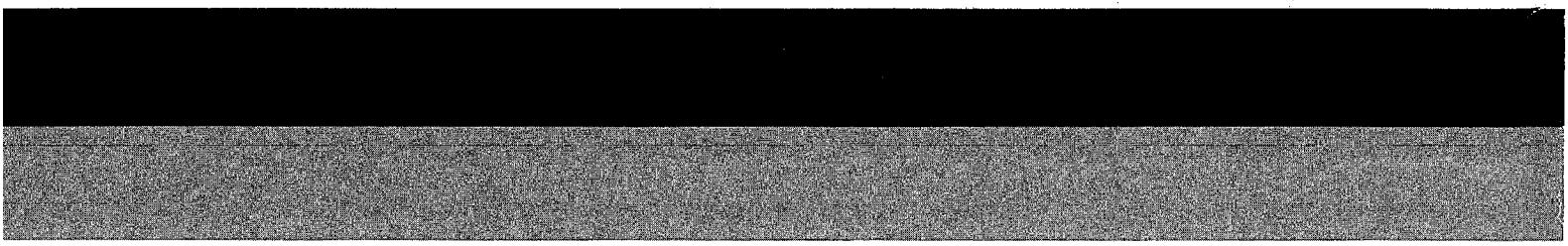

JVC

VICTOR COMPANY OF JAPAN, LIMITED
AUDIO PRODUCT DIVISION 1644, SHIMOTSURUMA, YAMATO-SHI, KANAGAWA-KEN, 242, JAPAN

(No. 20578)

Printed in Japan
9604[O]